


## Specifications

| Model | 3V1-M5 | 3V1-06 |
|---|---|---|
| Fluid | Air(to be filered by 40μm filter element) | |
| Acting | Direct acting | |
| Port size ① | M5 | PT1/8 |
| Valve type | 3 port 2 position | |
| Lubrication | Not required | |
| Operating pressure | 0~0.8MPa(0~114psi) | |
| Proof pressure | 1.2MPa(175psi) | |
| Temperature ℃ | -20~70 | |
| Orifice size | Φ1.2mm | |
| Material of body | Aluminum alloy | |

① PT thread, G thread and NPT thread are available.

## Symbol

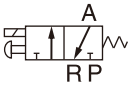


## Coil specifications

| Item | specifications | | | | |
|---|---|---|---|---|---|
| Standard voltage | AC220V | AC110V | AC24V | DC24V | DC12V |
| Scope of voltage | AC: ±15% DC: ±10% | | | | |
| Power consumption | 4.5VA | 4.5VA | 5.0VA | 3.0W | 3.0W |
| Protection | IP65(DIN40050) | | | | |
| Temperature classification | B class | | | | |
| Electrical entry | Terminal, Grommet | | | | |
| Activating time | 0.05 sec and below | | | | |
| Max. frequency ① | 10 cycle/sec | | | | |

① The maximum actuation frequency is in the no-load state.

## Product feature

1. Direct acting type and normally closed mode, flexible in direction change.
2. No need to add oil for lubrication.
3. Several valves can be installed integrately to save installation space.
4. Affiliated manual devices are equipped to facilitate installation and dubugging.
5. Several standard voltage grades are optional.

## Ordering code

**3V** — **Model**

| | |
|---|---|
| 3V | Solenoid valve (3/2 way) |

**1** — **Code**

| | |
|---|---|
| 1 | 1 Series |

**06** — **Port size**

| | |
|---|---|
| M5 | M5 |
| 06 | PT1/8 |

**A** — **Voltage**

| | |
|---|---|
| A | AC220V |
| B | DC24V |
| C | AC110V |
| E | AC24V |
| F | DC12V |

□ — **Electrical entry**

| | |
|---|---|
| Blank | Terminal |
| I | Grommet |

□ — **Thread type**

| Port size | Thread type |
|---|---|
| 1/8" | Blank: PT |
| | G: G |
| | T: NPT |
| M5 | Not this code |

## Flow chart

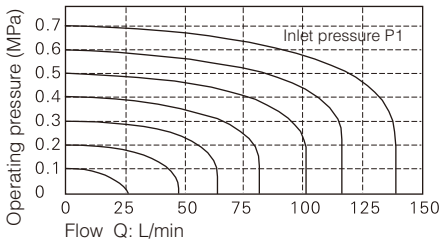


## Inner structure

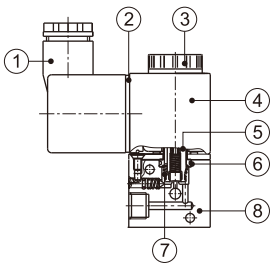


| No. | Item | No. | Item |
|---|---|---|---|
| 1 | Connector | 5 | Armature |
| 2 | Gasket | 6 | O-ring |
| 3 | Coil nut | 7 | Return spring |
| 4 | Coil | 8 | Body |

## Dimensions

Terminal

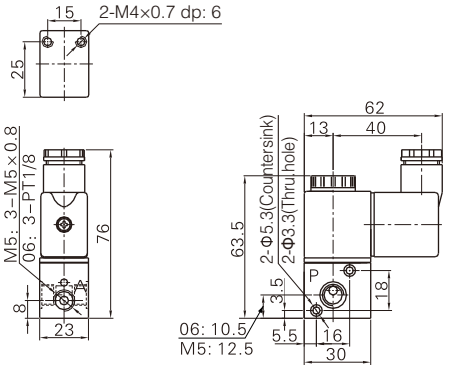


Grommet

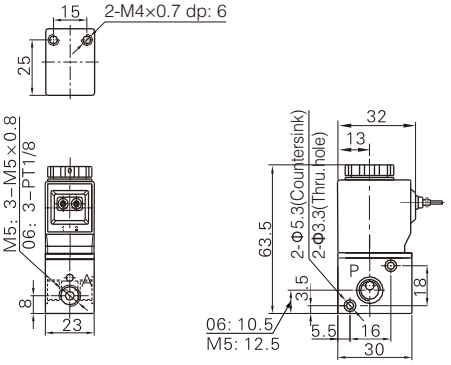


## Series connection

Dimensions(3F)

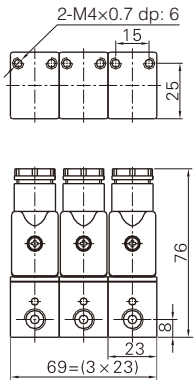


Dimensions(1F)

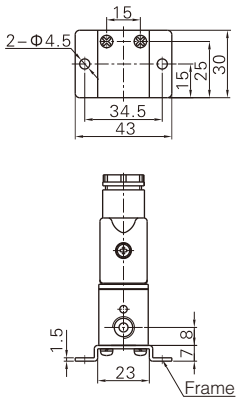


How to joint

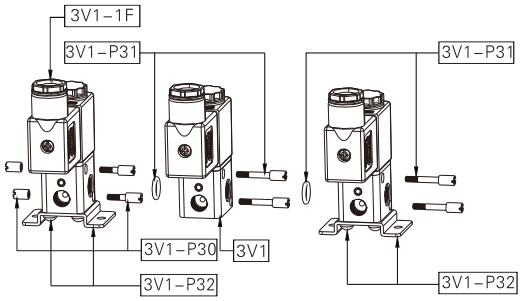


### Product structure

| Connection Amount\Q.TY | 3V1 | 3V1-P30 | 3V1-P31 | 3V1-P32 |
|---|---|---|---|---|
| 3V1-□-□-1F | 1 | 0 | 0 | 1 |
| 3V1-□-□-2F | 2 | 1 | 1 | 1 |
| …… | …… | …… | …… | …… |
| 3V1-□-□-nF | n | 1 | n-1 | 2 |

Note: n is the number of junction valve, and n⩾3.

## Ordering code for series

**3V** — Model

| | |
|---|---|
| 3V | Solenoid valve (3/2 way) |

**1** — Code

| | |
|---|---|
| 1 | 1 Series |

**06** — Port size

| | |
|---|---|
| M5 | M5 |
| 06 | PT1/8 |

**A** — Voltage

| | |
|---|---|
| A | AC220V |
| B | DC24V |
| C | AC110V |
| E | AC24V |
| F | DC12V |

**□** — Electrical entry

| | |
|---|---|
| Blank | Terminal |
| I | Grommet |

**3F** — Number of stations

| | |
|---|---|
| 1F | 1 Station |
| 2F | 2 Station |
| 3F | 3 Station |
| …… | |
| 20F | 20 Station |

**□** — Thread type

| Port size | Thread type |
|---|---|
| 1/8" | BlankP: T |
| | G: G |
| | T: NPT |
| M5 | Not this code |

The above codes have included the series accessories, so it is unnecessary to order the accessories specially. But if you like, you could order as follows.

| Code of accessories | Accessory name | Part code | Part name | Quantity |
|---|---|---|---|---|
| 3V1-P30 | Coupling screw assembly | F-3V1002N | Coupling screw(S) | 2 |
| | | F-3V1003N | Coupling screw(M) | 2 |
| 3V1-P31 | Coupling screw assembly | GOR20008N75 | O-Ring | 1 |
| | | F-3V1004N | Coupling screw(L) | 2 |
| 3V1-P32 | Bracket assembly | F-3V1001N | Fixed mounting | 1 |
| | | GSDA04008WA | Cross round head screw | 2 |




## Specifications

| Model | | 3V206 | 3V208 |
|---|---|---|---|
| Fluid | | Air(to be filtered by 40μm filter element) | |
| Acting | | Direct acting | |
| Port size ① | | PT1/8 | PT1/4 |
| Vave type | | 3 port 2 position | |
| Orifice size | | 3.2mm²(Cv=0.18) | 3.4mm²(Cv=0.19) |
| Lubrication | | Not required | |
| Operating Pressure | Common | 0~0.8MPa(0~114psi) | |
| | Vacuum | -102.2kPa~0.1MPa(-1.45~14.2psi) | |
| Proof pressure | | 1.2MPa(175psi) | |
| Temperature ℃ | | -20~70 | |
| Material of body | | Aluminum alloy | |

① PT thread, G thread and NPT thread are avlil.

## Symbol




## Coil specifications

| Item | specifications | | | | |
|---|---|---|---|---|---|
| Standard voltage | AC220V | AC110V | AC24V | DC24V | DC12V |
| Scope of voltage | AC: ±15% DC: ±10% | | | | |
| Power consumption | AC: 7VA DC: 7.0W | | | | |
| Protection | IP65(DIN40050) | | | | |
| Temperature classification | B class | | | | |
| Electrical entry | Terminal, Grommet | | | | |
| Activating time | 0.05 sec and below | | | | |
| Max. frequency ① | 10 cycle/sec | | | | |

① The maximum actuation frequency is in the no-load state.

## Product feature

1. Direct acting type and normally closed mode, flexible in direction change.
2. Normally closed and normally open types are optional.
3. Structure in coaxial blanking mode: leakage proof and large air flow.
4. No need to add oil for lubrication.
5. Affiliated manual devices are equipped to facilitate installation and debugging.
6. Several standard voltage grades are optional.
7. Can be used under vacuum condition.

## Ordering code

**3V** | **2** | **08** | **NC** | **A** | □ | □

**Model**

| | |
|---|---|
| 3V | Solenoid valve (3/2 way) |

**Code**

| | |
|---|---|
| 2 | 2 Series |

**Port size**

| | |
|---|---|
| 06 | 1/8" |
| 08 | 1/4" |

**Acting type**

| | |
|---|---|
| NC | Normally closed |
| NO | Normally opened |

**Voltage**

| | |
|---|---|
| A | AC220V |
| B | DC24V |
| C | AC110V |
| E | AC24V |
| F | DC12V |

**Electrical entry**

| | |
|---|---|
| Blank | Terminal |
| I | Grommet |

**Thread type**

| | |
|---|---|
| Blank | PT |
| G | G |
| T | NPT |

## Ordering code of accessories

**F** – **3V2** **FA**

**Accessories code**

| | |
|---|---|
| F | Mounting accessories |

**Valve type**

| | |
|---|---|
| 3V2 | Solenoid valve(3/2 way) |

**Accessories type**

| | |
|---|---|
| FA | FA Bracket |

## Flow chart

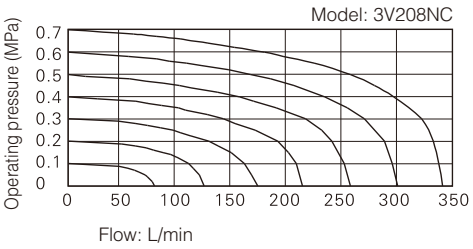


## Inner structure

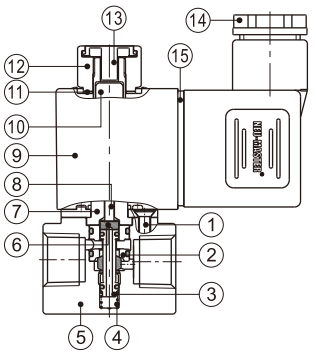


| No. | Item | No. | Item |
|---|---|---|---|
| 1 | Pilot screw | 9 | Coil |
| 2 | Spacer | 10 | Armature |
| 3 | Spool | 11 | Washer |
| 4 | Spring | 12 | Coil nut |
| 5 | Body | 13 | Manual button |
| 6 | Washer | 14 | Connector |
| 7 | Electromagnet set | 15 | Gasket |
| 8 | Man drill | | |

## Dimensions

Terminal

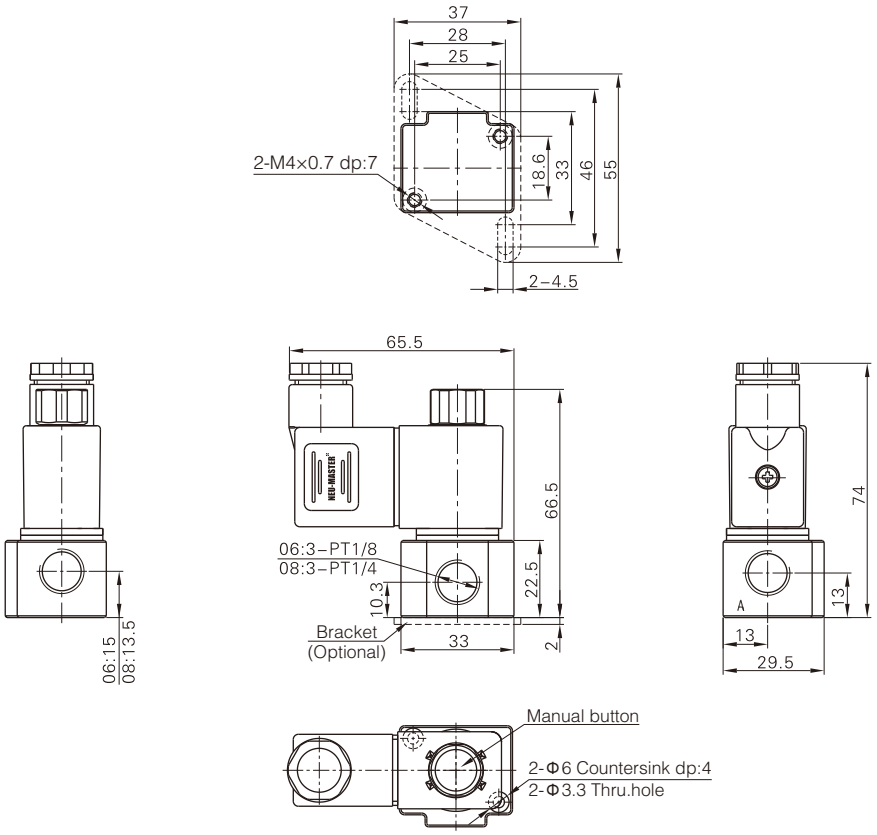


Grommet

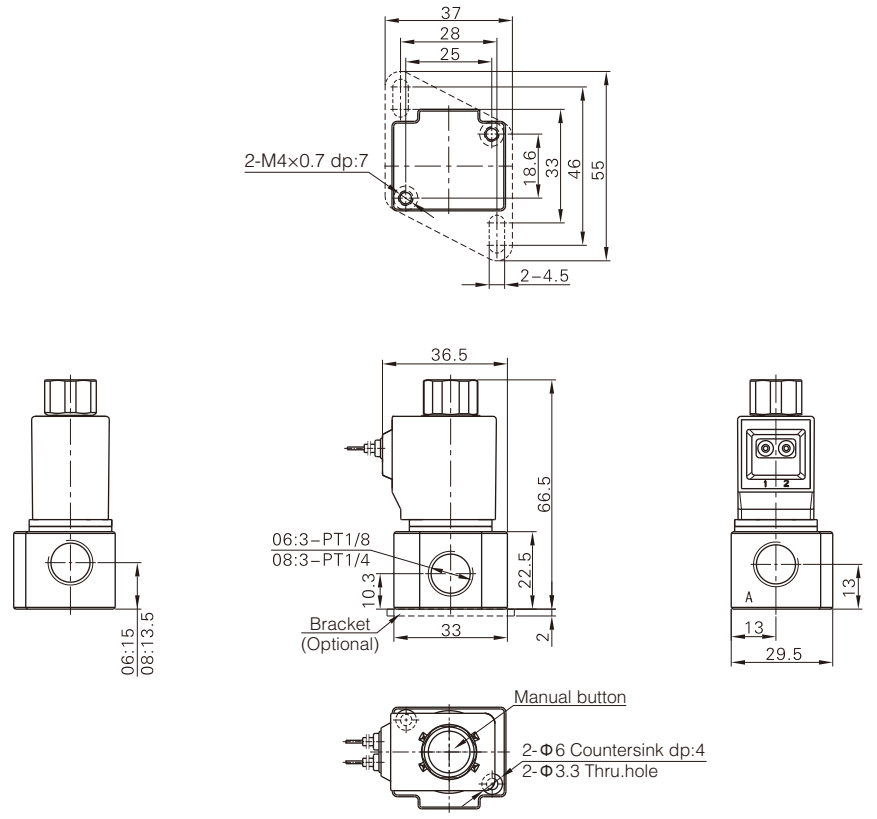




## Symbol

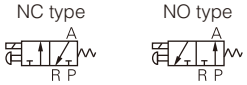


## Specifications

| Model | 3V2M |
|---|---|
| Fluid | Air (to be filtered by 40μm filter element) |
| Acting | Direct acting |
| Port size ① | 1/8" |
| Valve type | 3 port 2 position |
| Orifice size | 1.7mm²(Cv=0.1) |
| Exhaust type | Centralized exhaust, Separated exhaust |
| Operating pressure | 0~0.8MPa(0~114psi) |
| Proof pressure | 1.2MPa(175psi) |
| Temperature ℃ | -20~70 |
| Material of body | Aluminum alloy |

① PT thread, G thread and NPT thread are available.

## Product feature

1. Direct acting type and normally closed mode, flexible in direction change.
2. Normally closed and normally open types are optional.
3. Structure in coaxial blanking mode: leakage proof and large air flow.
4. No need to add oil for lubrication.
5. Affiliated manual devices are equipped to facilitate installation and debugging.
6. Valve needs to be used with the sub-base and allows various connection combinations to save space.
7. It is easy to examine when there are faults owning to the nuified air intake and exhaust and unified wiring.
8. Flexible combination and strong expansion capability can make any combination or expansion of the numbers of direction control valves that are connected.
9. Can adjust the installation direction of special sub-base seal for NO or NC functions.

## Coil specifications

| Item | Specification | | | | |
|---|---|---|---|---|---|
| Standard voltage | AC220V | AC110V | AC24V | DC24V | DC12V |
| Scope of voltage | AC: ±15% DC: ±10% | | | | |
| Power consumption | AC: 7VA DC: 7.0W | | | | |
| Protection | IP65(DIN40050) | | | | |
| Temperature classification | B Class | | | | |
| Electrical entry | Terminal, Grommet | | | | |
| Activating time | 0.05 sec and below | | | | |
| Max. frequency ① | 10 cvcle/sec | | | | |

① The maximum actuation frequency is in the no-load state.

## Ordering code

### Ordering code for calve

**3V2M** **NC** **A** **□**

**Model**

| | |
|---|---|
| 3V2M | Solenoid valve (3/2 way, with manifold) |

**Acting type**

| | |
|---|---|
| NC | Normally closed |
| NO | Normally opened |

**Voltage**

| | |
|---|---|
| A | AC220V |
| B | DC24V |
| C | AC110V |
| E | AC24V |
| F | DC12V |

**Electrical entry**

| | |
|---|---|
| Blank | Terminal |
| I | Grommet |

### Ordering code formanifold

**3V2M** **5F** **D** **□**

**Model**

| | |
|---|---|
| 3V2M | Solenoid valve (3/2 way, with manifold) |

**Number of stations**

| | |
|---|---|
| 1F | 1 Stantion |
| 2F | 2 Stantion |
| ..... | |
| 20F | 20 Stantion |

**Exhaust type**

| | |
|---|---|
| Blank | Centralized exhaust |
| D | Separated exhaust |

**Thread type**

| | |
|---|---|
| Blank | PT |
| G | G |
| T | NPT |

Note: Manifold kits contains manifold, seal and screw. The port size is only 1/8".

### Ordering code for calve's group(valve+manifold)

**3V2M** **NC** **A** **□** - **D** **5F** **□**

**Model**

| | |
|---|---|
| 3V2M | Solenoid valve (3/2 way, with manifold) |

**Acting type**

| | |
|---|---|
| NC | Normally closed |
| NO | Normally opened |

**Voltage**

| | |
|---|---|
| A | AC220V |
| B | DC24V |
| C | AC110V |
| E | AC24V |
| F | DC12V |

**Electrical entry**

| | |
|---|---|
| Blank | Terminal |
| I | Grommet |

**Exhaust type**

| | |
|---|---|
| Blank | Centralized exhaust |
| D | Separated exhaust |

**Number of stations**

| | |
|---|---|
| 1F | 1 Stantion |
| 2F | 2 Stantion |
| ..... | |
| 20F | 20 Stantion |

**Thread type**

| | |
|---|---|
| Blank | PT |
| G | G |
| T | NPT |

### Ordering code for blank plate

**P** - **3V2M** **R2**

**Assembly code**

| | |
|---|---|
| P | Assembly |

**Model**

| | |
|---|---|
| 3V2M | Solenoid valve (3/2 way, with manifold) |

**Code**

| | |
|---|---|
| R2 | Blank plate for manifold |

Note: Manifold kits contains manifold, seal and screw. The port size is only 1/8".

## Flow chart

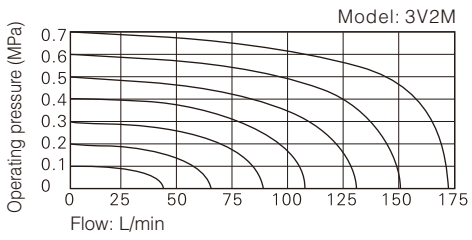


## Inner structure

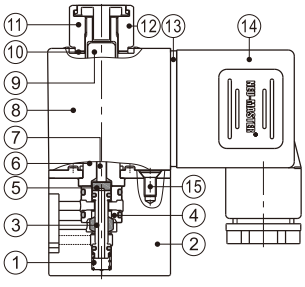


| No. | Item | No. | Item |
|---|---|---|---|
| 1 | Spring | 9 | Armature |
| 2 | Body | 10 | Washer |
| 3 | Spool | 11 | Coil nut |
| 4 | Spacer | 12 | Manual button |
| 5 | Washer | 13 | Gasket |
| 6 | Electromagnet set | 14 | Connector |
| 7 | Man drill | 15 | Pilot screw |
| 8 | Coil | | |

## Dimensions

### Valve (Terminal)

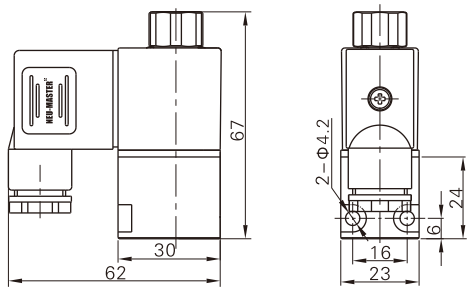


### Valve (Grommet)

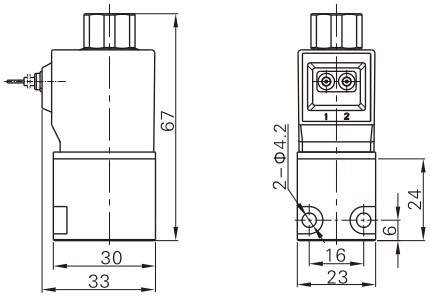


### Valve's group (Terminal, Centralized exhaust)

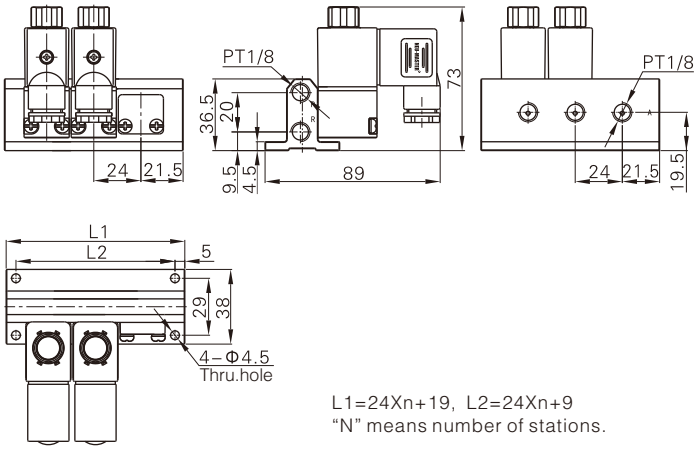


L1=24Xn+19, L2=24Xn+9
"N" means number of stations.

### Valve's group (Terminal, Separated exhaust)

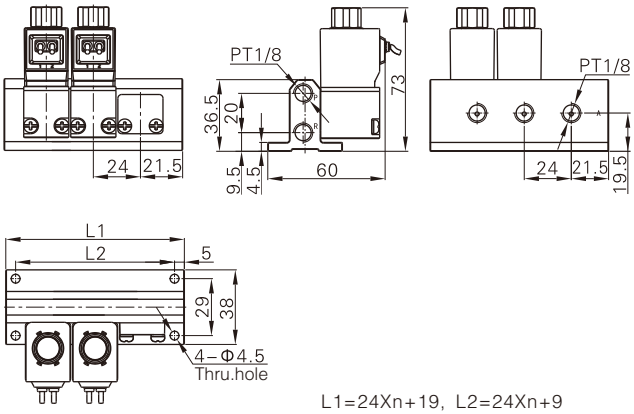


L1=24Xn+19, L2=24Xn+9
"N" means number of stations.

### Valve's group (Grommet, Centralized exhaust)

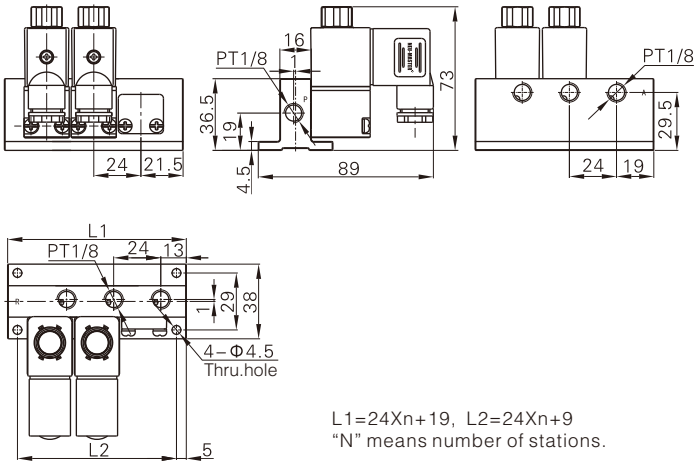


L1=24Xn+19, L2=24Xn+9
"N" means number of stations.

### Valve's group (Grommet, Separated exhaust)

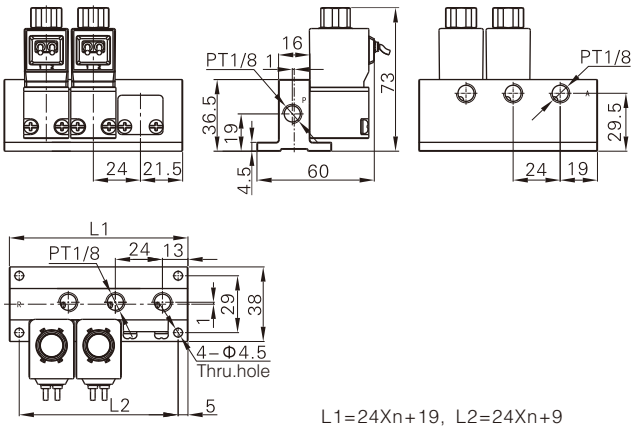


L1=24Xn+19, L2=24Xn+9
"N" means number of stations.



## Specifications

| Model | | 3V308 |
|---|---|---|
| Fluid | | Air(to be filtered by 40μm filter element) |
| Acting | | direct acting |
| Port size ① | | PT1/4 |
| Vave type | | 3 port 2 position |
| Orifice size | | 11mm²(Cv=0.62) |
| Lubrication | | Not required |
| Operating Pressure | Common | 0~0.8MPa(0~114psi) |
| | Vacuum | -102.2kPa~0.1MPa(-1.45~14.2psi) |
| Proof pressure | | 1.2MPa(175psi) |
| Temperature ℃ | | -20~70 |
| Material of body | | Aluminum alloy |

① PT thread, G thread and NPT thread are avlil.

## Symbol

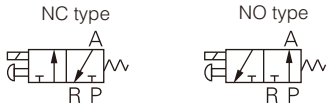


## Coil specifications

| Item | specifications | | | | |
|---|---|---|---|---|---|
| Standard voltage | AC220V | AC110V | AC24V | DC24V | DC12V |
| Scope of voltage | AC: ±15% DC: ±10% | | | | |
| Power consumption | AC: 10VA DC: 6.5W | | | | |
| Protection | IP65(DIN40050) | | | | |
| Temperature classification | B class | | | | |
| Electrical entry | Terminal, Grommet | | | | |
| Activating time | 0.05 sec and below | | | | |
| Max. frequency ① | 10 cycle/sec | | | | |

① The maximum actuation frequency is in the no-load state.

## Product feature

1. Direct acting type and normally closed mode, flexible in direction change.
2. Normally closed and normally open types are optional.
3. Structure in coaxial blanking mode: leakage proof and large air flow.
4. No need to add oil for lubrication.
5. Affiliated manual devices are equipped to facilitate installation and debugging.
6. Several standard voltage grades are optional.
7. Can be used under vacuum condition.

## Ordering code

**3V** — **Model**

| | |
|---|---|
| 3V | Solenoid valve (3/2 way) |

**3** — **Code**

| | |
|---|---|
| 3 | 3 Series |

**08** — **Port size**

| | |
|---|---|
| 08 | 1/4" |

**NC** — **Acting type**

| | |
|---|---|
| NC | Normally closed |
| NO | Normally opened |

**A** — **Voltage**

| | |
|---|---|
| A | AC220V |
| B | DC24V |
| C | AC110V |
| E | AC24V |
| F | DC12V |

□ — **Electrical entry**

| | |
|---|---|
| Blank | Terminal |
| I | Grommet |

□ — **Thread type**

| | |
|---|---|
| Blank | PT |
| G | G |
| T | NPT |

## Flow chart

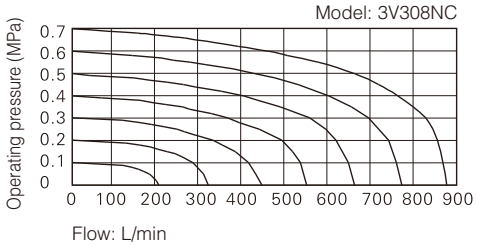


## Inner structure

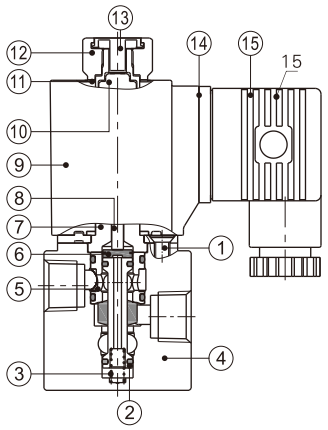


| No. | Item | No. | Item |
|---|---|---|---|
| 1 | Pilot screw | 9 | Coil |
| 2 | Spool | 10 | Armature |
| 3 | Spring | 11 | Washer |
| 4 | Body | 12 | Coil nut |
| 5 | Washer | 13 | Manual button |
| 6 | Spacer | 14 | Gasket |
| 7 | Electromagnet set | 15 | Connector |
| 8 | Man drill | | |

## Dimensions

Terminal

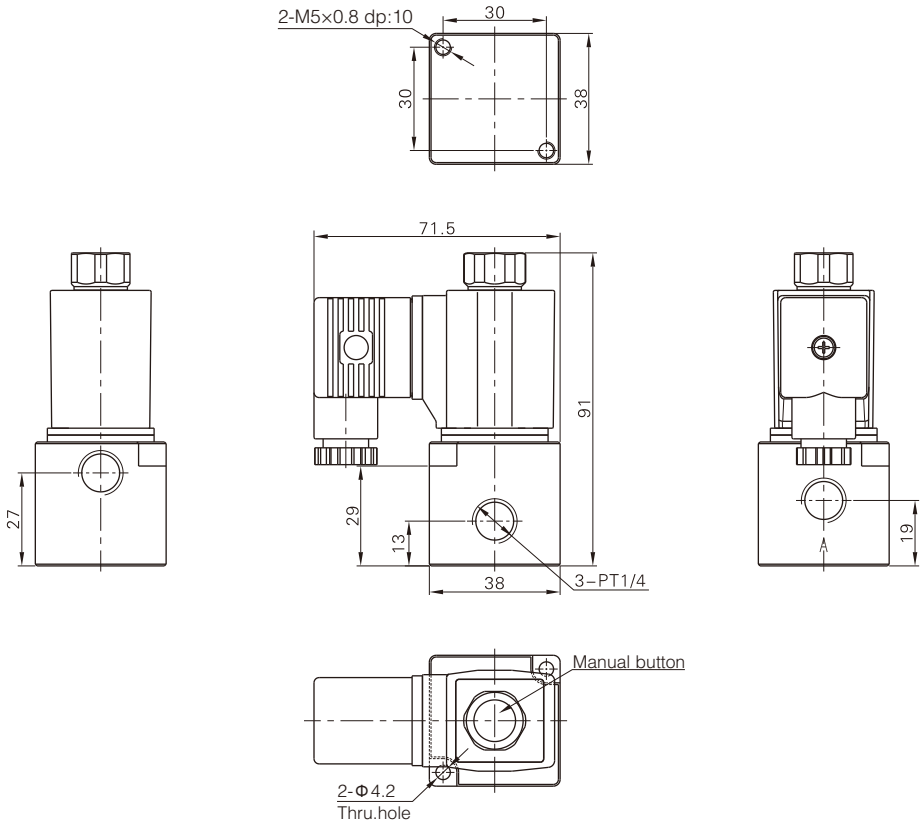


Grommet

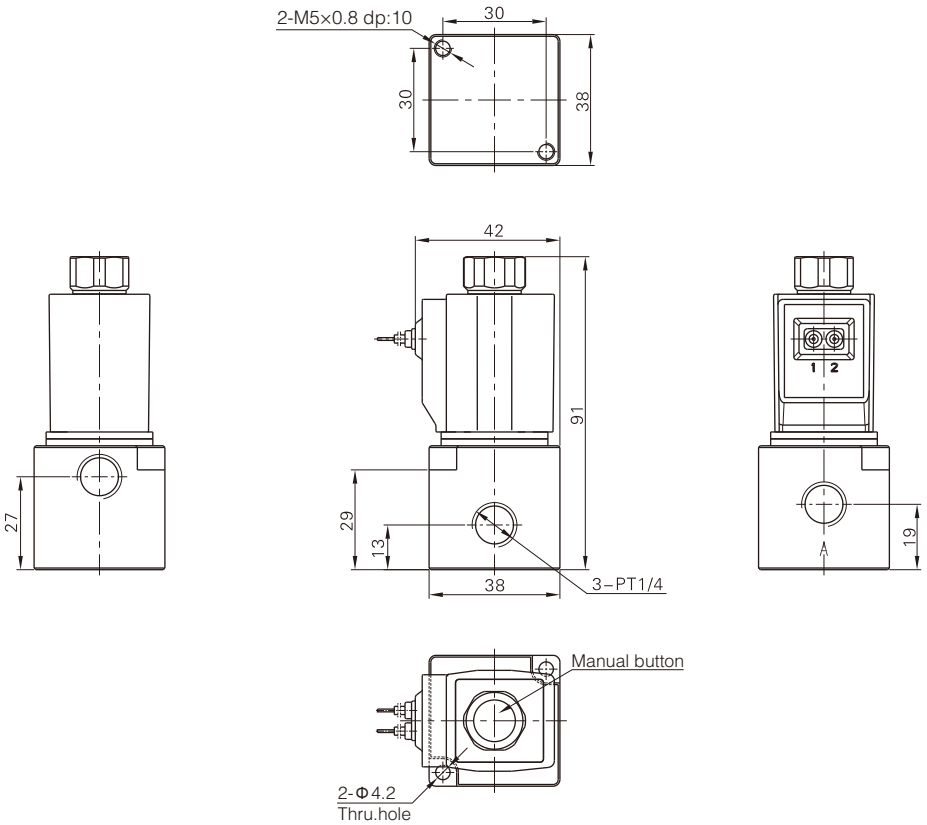



## Specifications

| Model | 3V110-M5 | 3V120-M5 | 3V110-06 | 3V120-06 |
|---|---|---|---|---|
| Fluid | Air(to be filtered by 40μm filter element) | | | |
| Acting | Internal pilot or external pilot | | | |
| Port size ① | M5 | | PT1/8 | |
| Orifice size | 5.5mm²(Cv=0.31) | | 12.0mm²(Cv=0.67) | |
| Valve type | 3 port 2 position | | | |
| Lubrication ② | Not required | | | |
| Operating pressure | 0.15~0.8MPa(21~114psi) | | | |
| Proof pressure | 1.2MPa(175psi) | | | |
| Temperature ℃ | -20~70 | | | |
| Material of body | Aluminum alloy | | | |

① PT thread, G thread and NPT thread are available.
② Once lubricated air is used, continue with same medium to optimise valve life span. Lubricants like ISO VG32 or equivalent are recommended.

## Symbol

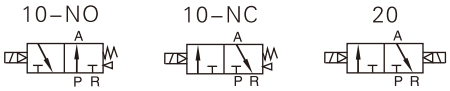


## Coil specifications

| Item | specifications | | | | |
|---|---|---|---|---|---|
| Standard voltage | AC220V | AC110V | AC24V | DC24V | DC12V |
| Scope of voltage | AC: ±15% DC: ±10% | | | | |
| Power consumption | 3.5VA | 3.5VA | 4.0VA | 2.5W | 2.5W |
| Protection | IP65(DIN40050) | | | | |
| Temperature classification | B Class | | | | |
| Electrical entry | Terminal, Grommet | | | | |
| Activating time | 0.05 sec and below | | | | |
| Max. frequency ① | 5 cycle/sec | | | | |

① The maximum actuation frequency is in the no-load state.

## Product feature

1. Pilot-oriented mode: Internal pilot or external pilot.
2. Structure in sliding column mode: good tightness and sensitive reaction.
3. Double control solenoid valves have memory function.
4. Internal hole adopts special processing technology which has little attrition friction, low start pressure and long service life.
5. No need to add oil for lubrication.
6. Affiliated manual devices are equipped to facilitate installation and debugging.
7. Several standard voltage grades are optional.
8. Integrate with the manifold to save installation space.

## Ordering code

**3V** **1** **10** **06** **NO** **A** □ □ – **W**

**Model**

| | |
|---|---|
| 3V | Solenoid valve (3/2 way) |

**Code**

| | |
|---|---|
| 1 | 100 Series |

**Valve type**

| | |
|---|---|
| 10 | Single solenoid |
| 20 | Double solenoid |

**Port size**

| | |
|---|---|
| M5 | M5 |
| 06 | PT1/8 |

**Acting type**

| Valve type | Acting type |
|---|---|
| 10 | NC: Normally closed |
| | NO: Normally opened |
| 20 | Not code |

**Voltage**

| | |
|---|---|
| A | AC220V |
| B | DC24V |
| C | AC110V |
| E | AC24V |
| F | DC12V |

**Electrical entry**

| | |
|---|---|
| Blank | Terminal |
| I | Grommet |

**Thread type**

| Port size | Thread type |
|---|---|
| PT1/8 | Blank: PT |
| | G: G |
| | T: NPT |
| M5 | Not this code |

**Pilot type**

Blank: Internal pilot

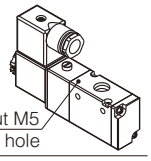


W: External pilot

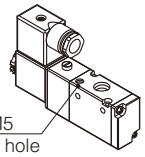


## Flow chart

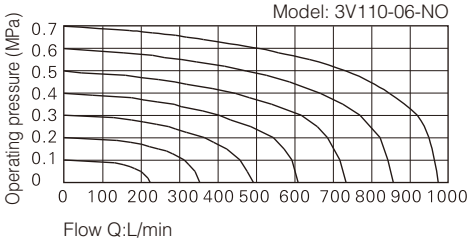

## Inner structure

**3V110**

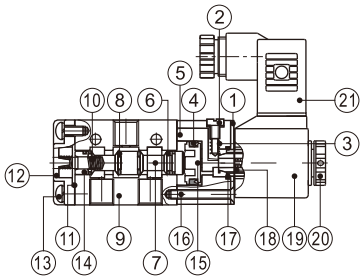


**3V120**

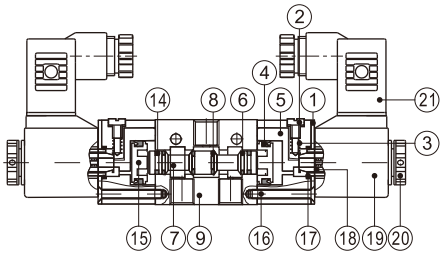


| No. | Item | No. | Item | No. | Item |
|---|---|---|---|---|---|
| 1 | Fixed plate | 8 | O-ring | 15 | Piston |
| 2 | Manual override | 9 | Body | 16 | Pilot screw |
| 3 | Override spring | 10 | Spool spring | 17 | O-ring |
| 4 | Piston O-ring | 11 | Bottom cover gasket | 18 | Armature |
| 5 | Pilot body | 12 | Bottom cover | 19 | Coil |
| 6 | Spool packing | 13 | Screw | 20 | Coil net |
| 7 | Spool | 14 | Wear ring | 21 | Connector |

## Dimensions

**3V110(Terminal)**

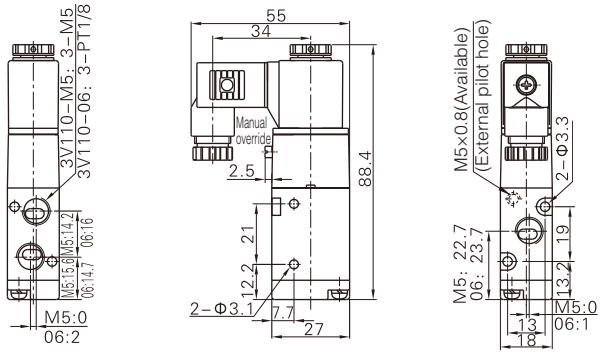


**3V110(Grommet)**

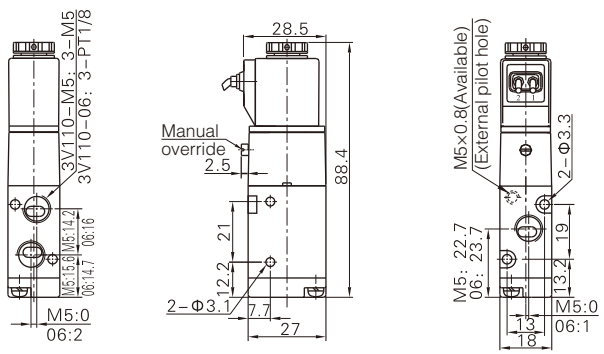


**3V120(Terminal)**

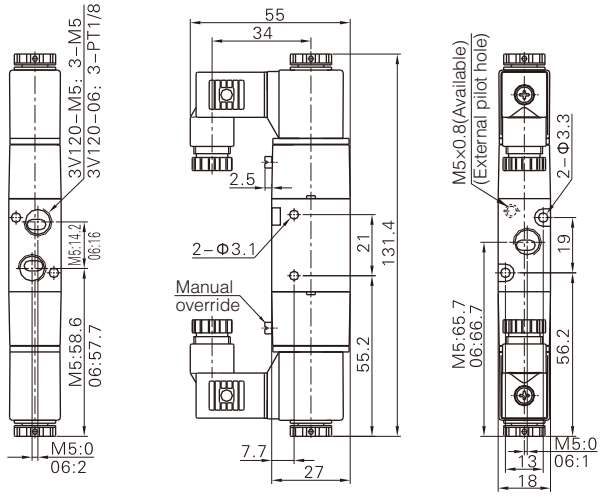


**3V120(Grommet)**

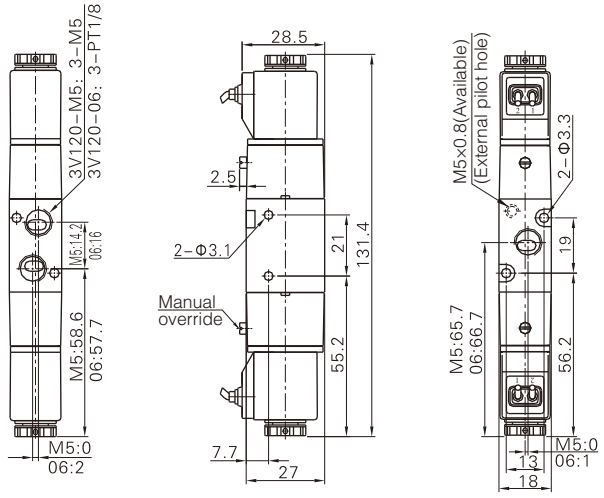




## Specifications

| Model | 3V210-06 | 3V220-06 | 3V210-08 | 3V220-08 |
|---|---|---|---|---|
| Fluid | Air(to be filtered by 40μm filter element) | | | |
| Acting | Internal pilot or external pilot | | | |
| Port size ① | In=Out=PT1/8 | | In=Out=PT1/4 | |
| Orifice size | 14.0mm²(Cv=0.78) | | 16.0mm²(Cv=0.89) | |
| Valve type | 3 port 2 position | | | |
| Lubrication ② | Not required | | | |
| Operating pressure | 0.15~0.8MPa(21~114psi) | | | |
| Proof pressure | 1.2MPa(175psi) | | | |
| Temperature ℃ | -20~70 | | | |
| Material of body | Aluminum alloy | | | |

① PT thread, G thread and NPT thread are available.
② Once lubricated air is used, continue with same medium to optimise valve life span. Lubricants like ISO VG32 orequivalent are recommended.

## Symbol

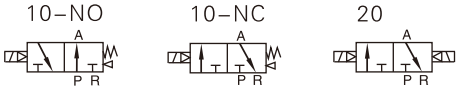


## Product feature

1. Pilot-oriented mode: Internal pilot or external pilot.
2. Structure in sliding column mode: good tightness and sensitive reaction.
3. Double control solenoid valves have memory function.
4. Internal hole adopts special processing technology which has little attrition friction, low start pressure and long service life.
5. No need to add oil for lubrication.
6. Affiliated manual devices are equipped to facilitate installation and debugging.
7. Several standard voltage grades are optional.
8. Integrate with the manifold to save installation space.

## Coil specifications

| Item | specifications | | | | |
|---|---|---|---|---|---|
| Standard voltage | AC220V | AC110V | AC24V | DC24V | DC12V |
| Scope of voltage | AC: ±15% DC: ±10% | | | | |
| Power consumption | 4.5VA | 4.5VA | 5.0VA | 3.0W | 3.0W |
| Protection | IP65(DIN40050) | | | | |
| Temperature classification | B Class | | | | |
| Electrical entry | Terminal, Grommet | | | | |
| Activating time | 0.05 sec and below | | | | |
| Max. frequency ① | 5 cycle/sec | | | | |

① The maximum actuation frequency is in the no-load state.

## Ordering code

**3V** | **2** | **10** | **08** | **NO** | **A** | □ | □ – **W**

**Model**

| | |
|---|---|
| 3V | Solenoid valve (3/2 way) |

**Code**

| | |
|---|---|
| 2 | 200 Series |

**Valve type**

| | |
|---|---|
| 10 | Single solenoid |
| 20 | Double solenoid |

**Port size**

| | |
|---|---|
| 06 | 1/8" |
| 08 | 1/4" |

**Acting type**

| Valve type | Acting type |
|---|---|
| 10 | NC: Normally closed |
| | NO: Normally opened |
| 20 | Not code |

**Voltage**

| | |
|---|---|
| A | AC220V |
| B | DC24V |
| C | AC110V |
| E | AC24V |
| F | DC12V |

**Electrical entry**

| | |
|---|---|
| Blank | Terminal |
| I | Grommet |

**Thread type**

| | |
|---|---|
| Blank | PT |
| G | G |
| T | NPT |

**Pilot type**

Blank: Internal pilot

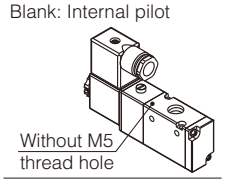


W: External pilot

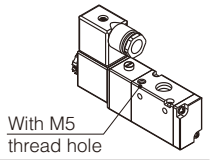


## Flow chart

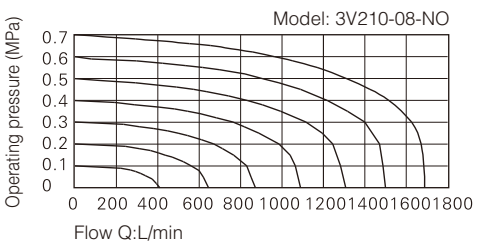

## Inner structure

**3V210**

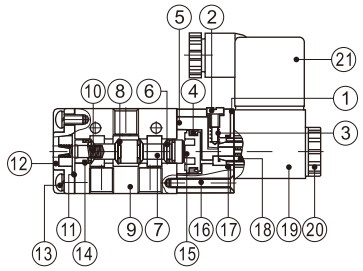


**3V220**

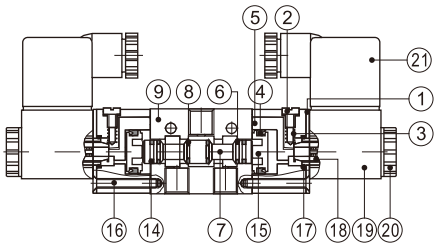


| No. | Item | No. | Item | No. | Item |
|---|---|---|---|---|---|
| 1 | Fixed plate | 8 | O-ring | 15 | Piston |
| 2 | Manual override | 9 | Body | 16 | Pilot screw |
| 3 | Override spring | 10 | Spool spring | 17 | O-ring |
| 4 | Piston O-ring | 11 | Bottom cover gasket | 18 | Armature |
| 5 | Pilot body | 12 | Bottom cover | 19 | Coil |
| 6 | Spool packing | 13 | Screw | 20 | Coil net |
| 7 | Spool | 14 | Wear ring | 21 | Connector |

## Dimensions

**3V210(Terminal)**

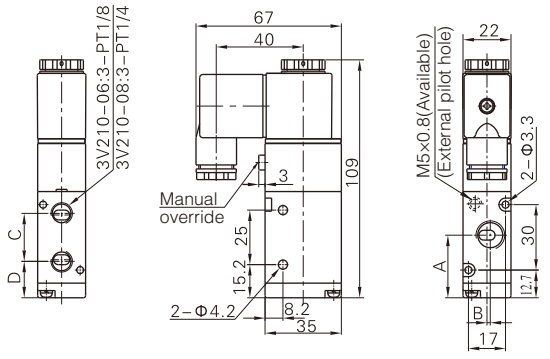


| Item\Model | 3V210-06 | 3V210-08 |
|---|---|---|
| A | 27.7 | 28.7 |
| B | 0 | 1.5 |
| C | 22 | 22.5 |
| D | 16.7 | 16.5 |

**3V210(Grommet)**

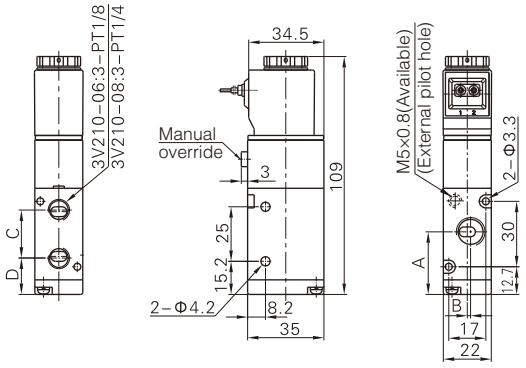


| Item\Model | 3V210-06 | 3V210-08 |
|---|---|---|
| A | 27.7 | 28.7 |
| B | 0 | 1.5 |
| C | 22 | 22.5 |
| D | 16.7 | 16.5 |

**3V220(Terminal)**

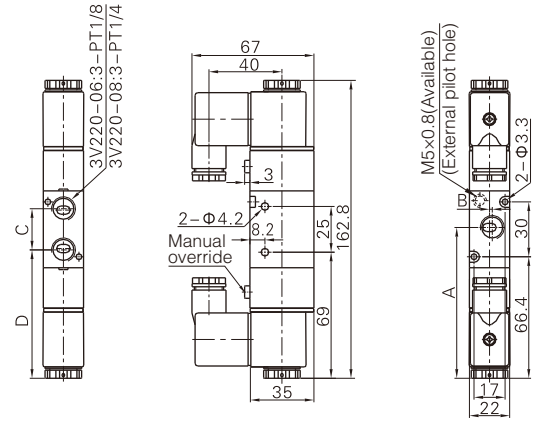


| Item\Model | 3V220-06 | 3V220-08 |
|---|---|---|
| A | 81.4 | 82.4 |
| B | 0 | 1.5 |
| C | 22 | 22.5 |
| D | 70.4 | 70.2 |

**3V220(Grommet)**

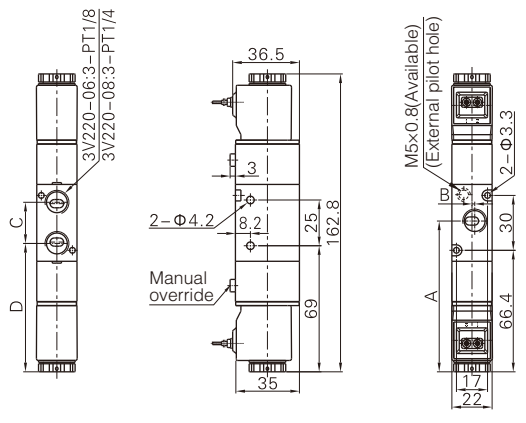


| Item\Model | 3V220-06 | 3V220-08 |
|---|---|---|
| A | 81.4 | 82.4 |
| B | 0 | 1.5 |
| C | 22 | 22.5 |
| D | 70.4 | 70.2 |



## Specifications

| Model | 3V310-08 | 3V320-08 | 3V310-10 | 3V320-10 |
|---|---|---|---|---|
| Fluid | Air(to be filtered by 40μm filter element) | | | |
| Acting | Internal pilot or external pilot | | | |
| Port size ① | In=Out=PT1/4 | | In=Out=PT3/8 | |
| Orifice size | 25.0mm²(Cv=1.39) | | 30.0mm²(Cv=1.67) | |
| Valve type | 3 port 2 position | | | |
| Lubrication ② | Not required | | | |
| Operating pressure | 0.15~0.8MPa(21~114psi) | | | |
| Proof pressure | 1.2MPa(175psi) | | | |
| Temperature ℃ | -20~70 | | | |
| Material of body | Aluminum alloy | | | |

① PT thread, G thread and NPT thread are available.
② Once lubricated air is used, continue with same medium to optimise valve life span. Lubricants like ISO VG32 orequivalent are recommended.

## Symbol

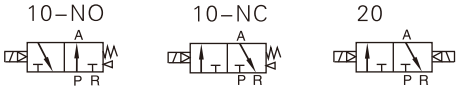


## Product feature

1. Pilot-oriented mode: Internal pilot or external pilot.
2. Structure in sliding column mode: good tightness and sensitive reaction.
3. Double control solenoid valves have memory function.
4. Internal hole adopts special processing technology which has little attrition friction, low start pressure and long service life.
5. No need to add oil for lubrication.
6. Affiliated manual devices are equipped to facilitate installation and debugging.
7. Several standard voltage grades are optional.
8. Integrate with the manifold to save installation space.

## Coil specifications

| Item | specifications | | | | |
|---|---|---|---|---|---|
| Standard voltage | AC220V | AC110V | AC24V | DC24V | DC12V |
| Scope of voltage | AC: ±15% DC: ±10% | | | | |
| Power consumption | 4.5VA | 4.5VA | 5.0VA | 3.0W | 3.0W |
| Protection | IP65(DIN40050) | | | | |
| Temperature classification | B Class | | | | |
| Electrical entry | Terminal, Grommet | | | | |
| Activating time | 0.05 sec and below | | | | |
| Max. frequency ① | 5 cycle/sec | | | | |

① The maximum actuation frequency is in the no-load state.

## Ordering code

**3V** **3** **10** **10** **NO** **A** □ □ – **W**

**Model**

| | |
|---|---|
| 3V | Solenoid valve (3/2 way) |

**Code**

| | |
|---|---|
| 3 | 300 Series |

**Valve type**

| | |
|---|---|
| 10 | Single solenoid |
| 20 | Double solenoid |

**Port size**

| | |
|---|---|
| 08 | 1/4" |
| 10 | 3/8" |

**Acting type**

| Valve type | Acting type |
|---|---|
| 10 | NC: Normally closed |
| | NO: Normally opened |
| 20 | Not code |

**Voltage**

| | |
|---|---|
| A | AC220V |
| B | DC24V |
| C | AC110V |
| E | AC24V |
| F | DC12V |

**Electrical entry**

| | |
|---|---|
| Blank | Terminal |
| I | Grommet |

**Thread type**

| | |
|---|---|
| Blank | PT |
| G | G |
| T | NPT |

**Pilot type**

Blank: Internal pilot

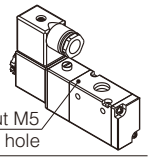


W: External pilot

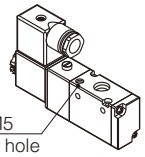


## Flow chart

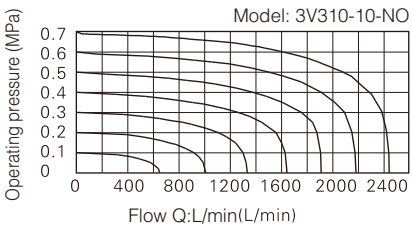

## Inner structure

**3V310**

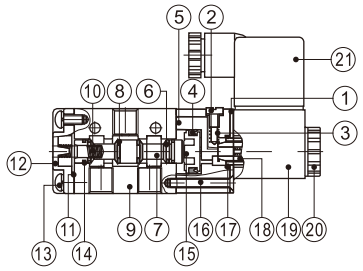


**3V320**

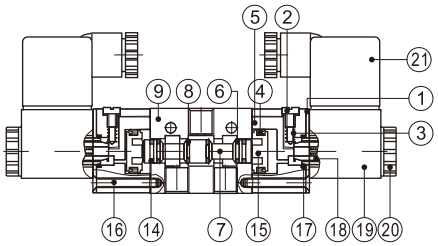


| No. | Item | No. | Item | No. | Item |
|---|---|---|---|---|---|
| 1 | Fixed plate | 8 | O-ring | 15 | Piston |
| 2 | Manual override | 9 | Body | 16 | Pilot screw |
| 3 | Override spring | 10 | Spool spring | 17 | O-ring |
| 4 | Piston O-ring | 11 | Bottom cover gasket | 18 | Armature |
| 5 | Pilot body | 12 | Bottom cover | 19 | Coil |
| 6 | Spool packing | 13 | Screw | 20 | Coil net |
| 7 | Spool | 14 | Wear ring | 21 | Connector |

## Dimensions

**3V310(Terminal)**

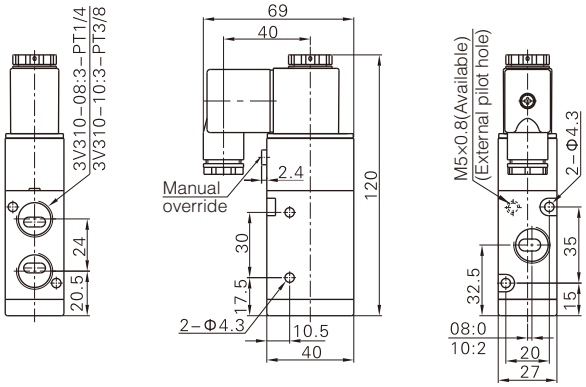


**3V310(Grommet)**

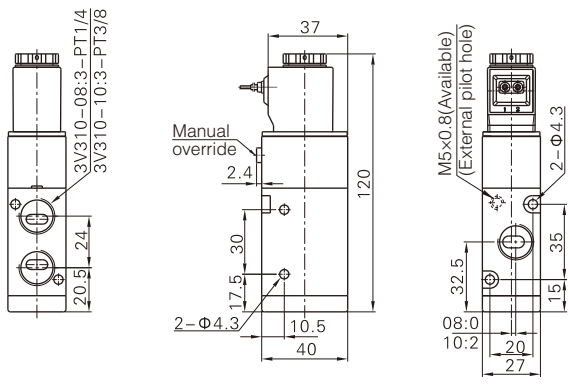


**3V320(Terminal)**

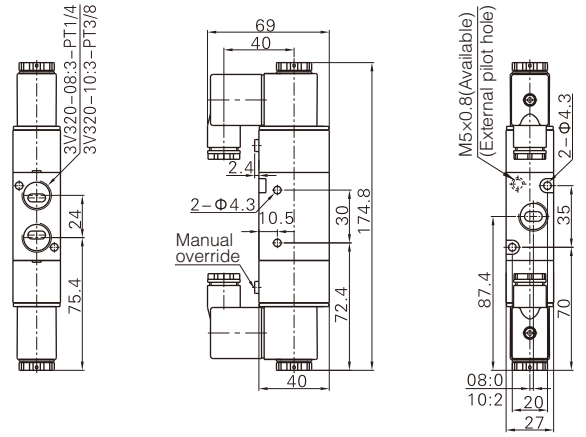


**3V320(Grommet)**

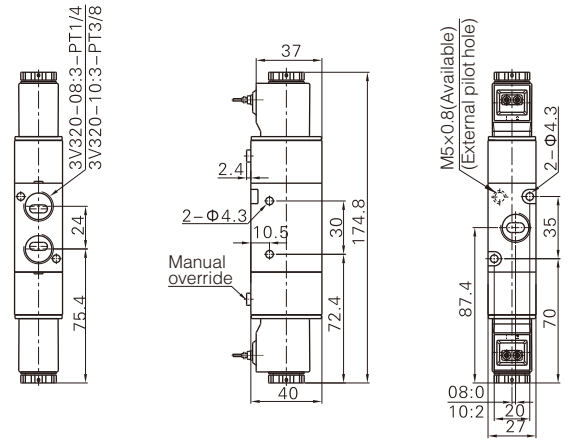



## Specifications

| Model | 4V110-M5<br>4V120-M5 | 4V130C-M5<br>4V130E-M5<br>4V130P-M5 | 4V110-06<br>4V120-06 | 4V130C-06<br>4V130E-06<br>4V130P-06 |
|---|---|---|---|---|
| Fluid | Air(to be filtered by 40μm filter element) | | | |
| Acting | Internal pilot or external pilot | | | |
| Port size ① | In=Out=M5 | | In=Out=PT1/8 | |
| Orifice size | 5.5mm²(Cv=0.31) | 5.0mm²(Cv=0.28) | 12.0mm²(Cv=0.67) | 9.0mm²(Cv=0.50) |
| Valve type | 5 port 2 position | 5 port 3 position | 5 port 2 position | 5 port 3 position |
| Operating pressure | 0.15~0.8MPa(21~114psi) | | | |
| Proof pressure | 1.2MPa(175psi) | | | |
| Temperature ℃ | -20~70 | | | |
| Material of body | Aluminum alloy | | | |
| Lubrication ② | Not required | | | |
| Max. frequency ③ | 5 cycle/sec | 3 cycle/sec | 5 cycle/sec | 3 cycle/sec |
| Weight(g) | 4V110-M5:120<br>4V120-M5:175 | 200 | 4V110-06:120<br>4V120-06:175 | 200 |

① PT thread, G thread and NPT thread are available.
② Once lubricated air is used, continue with same medium to optimise valve life span. Lubricants like ISO VG32 or equivalent are recommended.
③ The maximum actuation frequency is in the no-load state.

## Symbol

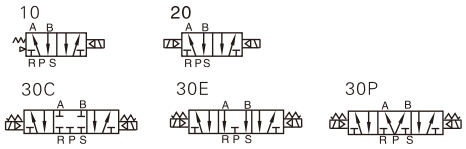


## Product feature

1. Pilot-oriented mode: Internal pilot or external pilot.
2. Structure in sliding column mode: good tightness and sensitive reaction.
3. Three position solenoid valves have three kinds of central functionfor your choice.
4. Double control solenoid valves have memory function.
5. Internal hole adopts special processing technology which has little attrition friction, low start pressure and long service life.
6. No need to add oil for lubrication.
7. It is available to form integrated valve group with the base to save installation space.
8. Affiliated manual devices are equipped to facilitate installation and debugging.
9. Several standard voltage grades are optional.

## Coil specifications

| Item | specifications | | | | |
|---|---|---|---|---|---|
| Standard voltage | AC220V | AC110V | AC24V | DC24V | DC12V |
| Scope of voltage | AC: ±15%  DC: ±10% | | | | |
| Power consumption | 3.5VA | 3.5VA | 4.0VA | 2.5W | 2.5W |
| Protection | IP65(DIN40050) | | | | |
| Temperature classification | B Class | | | | |
| Electrical entry | Terminal, Grommet | | | | |
| Activating time | 0.05 sec and below | | | | |

## Ordering code

**4V** **1** **10** **06** **A** □ □ – **W**

**Model**

| | |
|---|---|
| 4V | Solenoid valve (5/2, 5/3 way) |

**Code**

| | |
|---|---|
| 1 | 100 Series |

**Valve type**

| | |
|---|---|
| 10 | Single solenoid 5/2 way |
| 20 | Double solenoid 5/2 way |
| 30C | Double solenoid 5/3 way closed center |
| 30E | Double solenoid 5/3 way exhaust center |
| 30P | Double solenoid 5/3 way pressure center |

**Port size**

| | |
|---|---|
| M5 | M5 |
| 06 | 1/8" |

**Voltage**

| | |
|---|---|
| A | AC220V |
| B | DC24V |
| C | AC110V |
| E | AC24V |
| F | DC12V |

**Electrical entry**

| | |
|---|---|
| Blank | Terminal |
| I | Grommet |

**Thread type**

| Port size | Thread type |
|---|---|
| PT1/8 | Blank: PT |
| | G: G |
| | T: NPT |
| M5 | Not this code |

**Pilot type**

Blank: Internal pilot

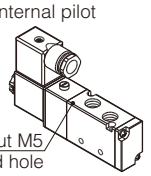


W: External pilot

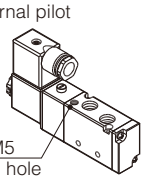


## Flow chart

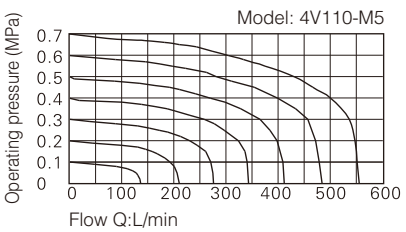


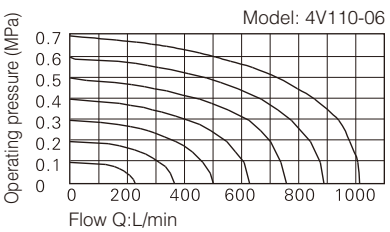

## Inner structure

**4V110**

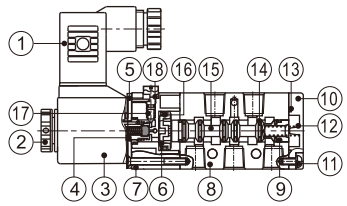


**4V120**

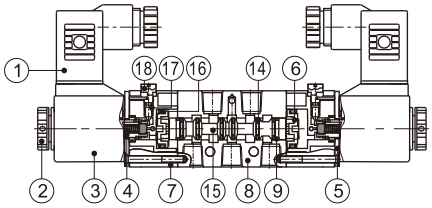


**4V130C**

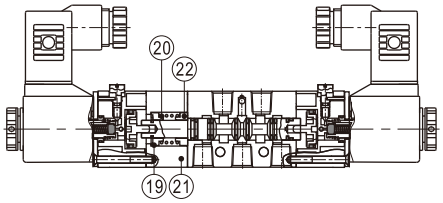


| No. | Item | No. | Item | No. | Item | No. | Item | No. | Item | No. | Item |
|---|---|---|---|---|---|---|---|---|---|---|---|
| 1 | Connector | 5 | Fixed plate | 9 | Wear ring | 13 | Bottom cover gasket | 17 | Override spring | 21 | Side cover |
| 2 | Coil net | 6 | Piston | 10 | Bottom cover | 14 | Spool O-ring | 18 | Manual override | 22 | Spring holder |
| 3 | Coil | 7 | Pilot kit | 11 | Fixed screw | 15 | Spool | 19 | Spring holder | | |
| 4 | Armature | 8 | Body | 12 | Spool spring | 16 | Piston O-ring | 20 | Return spring | | |

## Dimensions

**4V110(Terminal)**

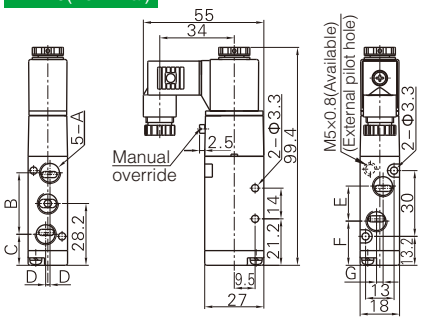


**4V110(Grommet)**

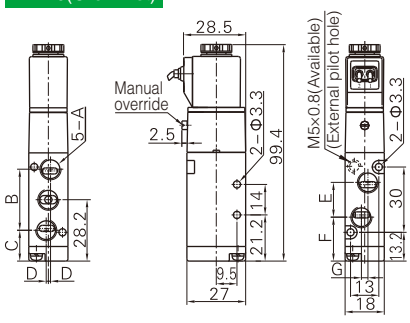


| Model\Item | A | B | C | D | E | F | G |
|---|---|---|---|---|---|---|---|
| 4V110-M5 | M5×0.8 | 27 | 14.7 | 0 | 14 | 21.2 | 0 |
| 4V110-06 | PT1/8 | 28 | 14.2 | 1 | 16 | 20.2 | 3 |

**4V120(Terminal)**

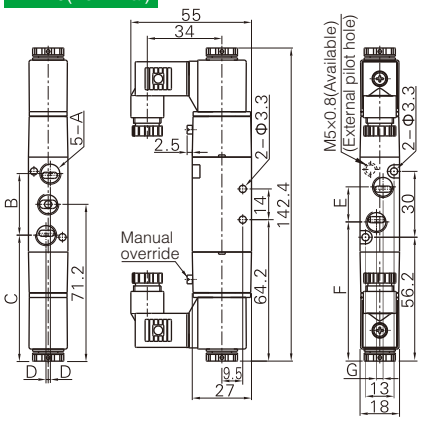


**4V120(Grommet)**

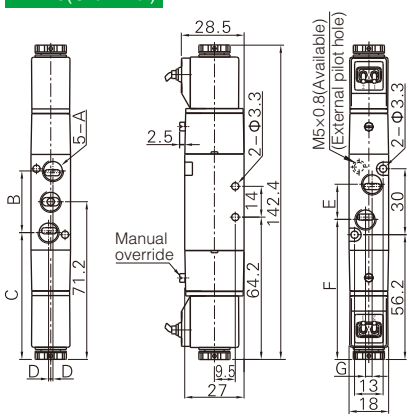


| Model\Item | A | B | C | D | E | F | G |
|---|---|---|---|---|---|---|---|
| 4V120-M5 | M5×0.8 | 27 | 57.7 | 0 | 14 | 64.3 | 0 |
| 4V120-06 | PT1/8 | 28 | 57.2 | 1 | 16 | 63.2 | 3 |

**4V130(Terminal)**

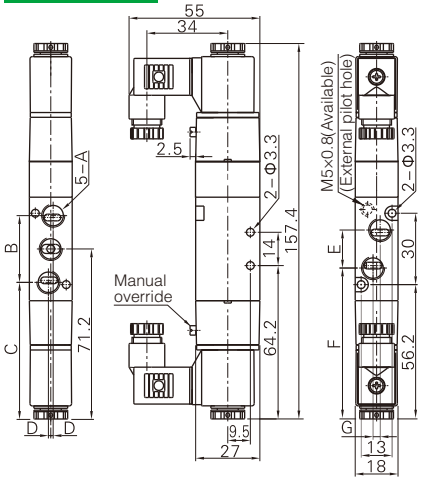


**4V130(Grommet)**

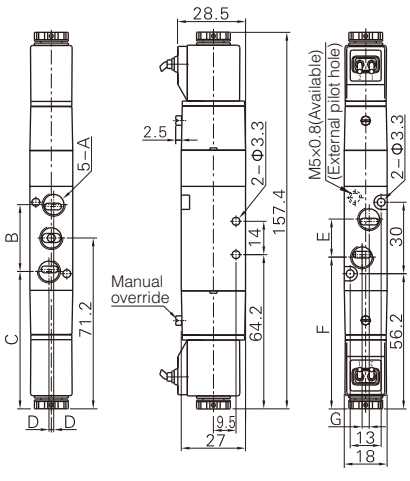


| Model\Item | A | B | C | D | E | F | G |
|---|---|---|---|---|---|---|---|
| 4V130-M5 | M5×0.8 | 27 | 57.7 | 0 | 14 | 64.3 | 0 |
| 4V130-06 | PT1/8 | 28 | 57.2 | 1 | 16 | 63.2 | 3 |



## Specifications

| Model | 4V210-06<br>4V220-06 | 4V230C-06<br>4V230E-06<br>4V230P-06 | 4V210-08<br>4V220-08 | 4V230C-08<br>4V230E-08<br>4V230P-08 |
|---|---|---|---|---|
| Fluid | Air(to be filtered by 40μm filter element) | | | |
| Acting | Internal pilot or external pilot | | | |
| Port size ① | In=Out=Exhaust=PT1/8 | | In=Out=PT1/4 Exhaust=PT1/8 | |
| Orifice size | 14.0mm²(Cv=0.78) | 12.0mm²(Cv=0.67) | 16.0mm²(Cv=0.89) | 12.0mm²(Cv=0.67) |
| Valve type | 5 port 2 position | 5 port 3 position | 5 port 2 position | 5 port 3 position |
| Operating pressure | 0.15~0.8MPa(21~114psi) | | | |
| Proof pressure | 1.2MPa(175psi) | | | |
| Temperature ℃ | -20~70 | | | |
| Material of body | Aluminum alloy | | | |
| Lubrication ② | Not required | | | |
| Max. frequency ③ | 5 cycle/sec | 3 cycle/sec | 5 cycle/sec | 3 cycle/sec |
| Weight(g) | 4V210-06:220<br>4V220-06:320 | 360 | 4V210-08:220<br>4V220-08:320 | 360 |

① PT thread, G thread and NPT thread are available.
② Once lubricated air is used, continue with same medium to optimise valve life span. Lubricants like ISO VG32 or equivalent are recommended.
③ The maximum actuation frequency is in the no-load state.

## Symbol

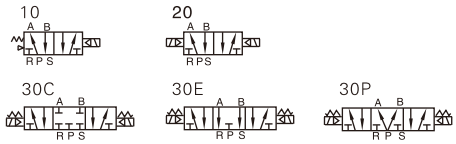


## Product feature

1. Pilot-oriented mode: Internal pilot or external pilot.
2. Structure in sliding column mode: good tightness and sensitive reaction.
3. Three position solenoid valves have three kinds of central functionfor your choice.
4. Double control solenoid valves have memory function.
5. Internal hole adopts special processing technology which has little attrition friction, low start pressure and long service life.
6. No need to add oil for lubrication.
7. It is available to form integrated valve group with the base to save installation space.
8. Affiliated manual devices are equipped to facilitate installation and debugging.
9. Several standard voltage grades are optional.

## Coil specifications

| Item | specifications | | | | |
|---|---|---|---|---|---|
| Standard voltage | AC220V | AC110V | AC24V | DC24V | DC12V |
| Scope of voltage | AC: ±15% DC: ±10% | | | | |
| Power consumption | 4.5VA | 4.5VA | 5.0VA | 3.0W | 3.0W |
| Protection | IP65(DIN40050) | | | | |
| Temperature classification | B Class | | | | |
| Electrical entry | Terminal, Grommet | | | | |
| Activating time | 0.05 sec and below | | | | |

## Ordering code

4V | 2 | 10 | 08 | A | □ | □ – W

**Model**

| | |
|---|---|
| 4V | Solenoid valve (5/2, 5/3 way) |

**Code**

| | |
|---|---|
| 2 | 200 Series |

**Valve type**

| | |
|---|---|
| 10 | Single solenoid 5/2 way |
| 20 | Double solenoid 5/2 way |
| 30C | Double solenoid 5/3 way closed center |
| 30E | Double solenoid 5/3 way exhaust center |
| 30P | Double solenoid 5/3 way pressure center |

**Port size**

| | |
|---|---|
| 06 | 1/8" |
| 08 | 1/4" |

**Voltage**

| | |
|---|---|
| A | AC220V |
| B | DC24V |
| C | AC110V |
| E | AC24V |
| F | DC12V |

**Electrical entry**

| | |
|---|---|
| Blank | Terminal |
| I | Grommet |

**Thread type**

| | |
|---|---|
| Blank | PT |
| G | G |
| T | NPT |

**Pilot type**

Blank: Internal pilot

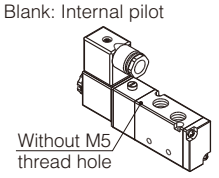


W: External pilot

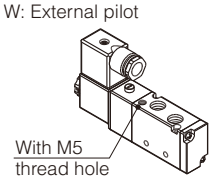


## Flow chart

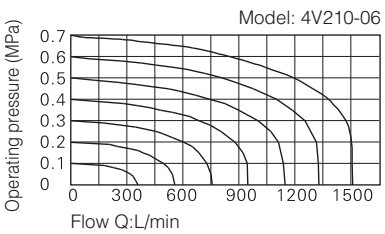


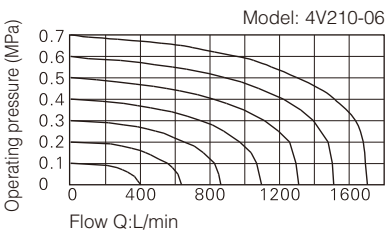

## Inner structure

**4V210**

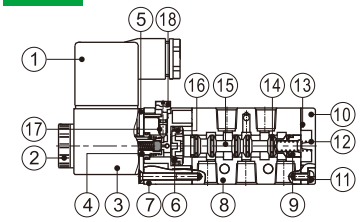


**4V220**

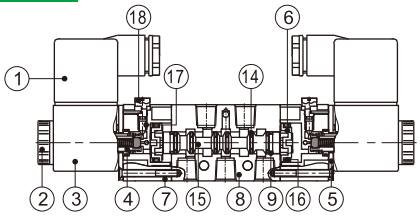


**4V230C**

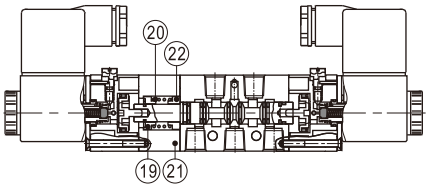


| No. | Item | No. | Item | No. | Item | No. | Item | No. | Item | No. | Item |
|---|---|---|---|---|---|---|---|---|---|---|---|
| 1 | Connector | 5 | Fixed plate | 9 | Wear ring | 13 | Bottom cover gasket | 17 | Override spring | 21 | Side cover |
| 2 | Coil net | 6 | Piston | 10 | Bottom cover | 14 | Spool O-ring | 18 | Manual override | 22 | Spring holder |
| 3 | Coil | 7 | Pilot kit | 11 | Fixed screw | 15 | Spool | 19 | Spring holder | | |
| 4 | Armature | 8 | Body | 12 | Spool spring | 16 | Piston O-ring | 20 | Return spring | | |

## Dimensions

**4V210(Terminal)**

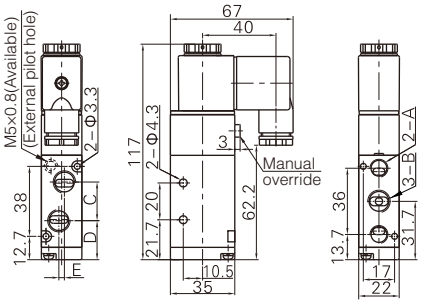


**4V210(Grommet)**

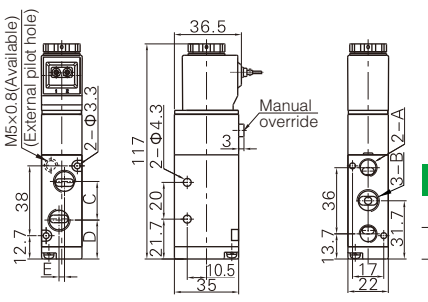


| Model\Item | A | B | C | D | E |
|---|---|---|---|---|---|
| 4V210-06 | PT1/8 | PT1/8 | 18 | 22.7 | 0 |
| 4V210-08 | PT1/8 | PT1/4 | 21 | 21.2 | 3 |

**4V220(Terminal)**

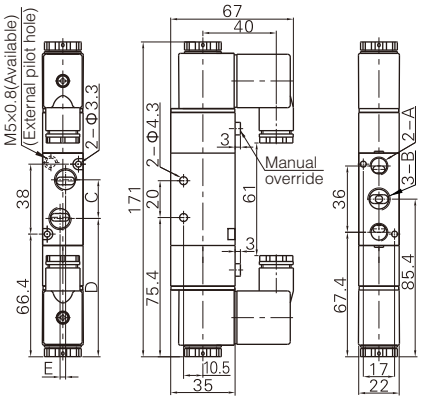


**4V220(Grommet)**

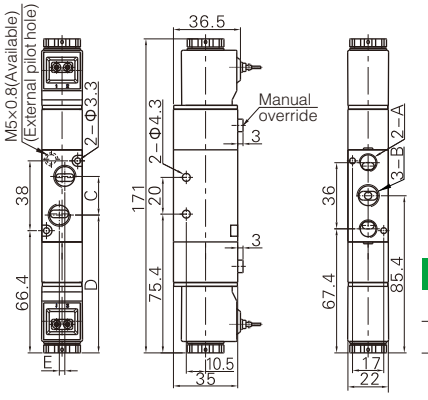


| Model\Item | A | B | C | D | E |
|---|---|---|---|---|---|
| 4V220-06 | PT1/8 | PT1/8 | 18 | 76.4 | 0 |
| 4V220-08 | PT1/8 | PT1/4 | 21 | 74.9 | 3 |

**4V230(Terminal)**

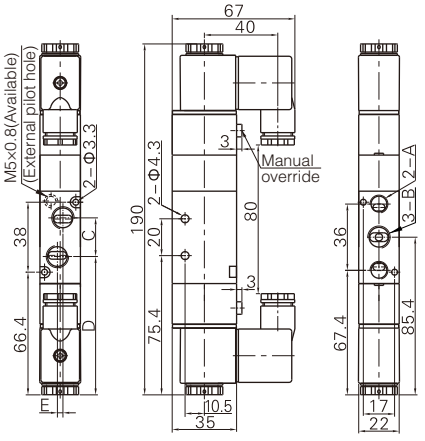


**4V230(Grommet)**

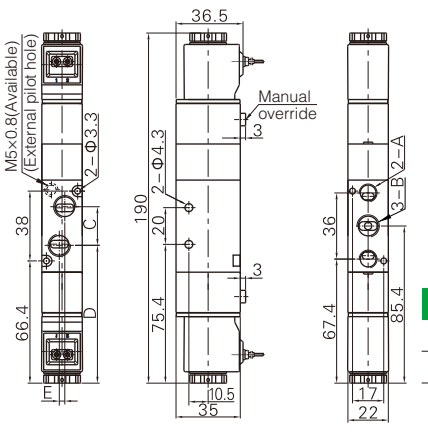


| Model\Item | A | B | C | D | E |
|---|---|---|---|---|---|
| 4V230-06 | PT1/8 | PT1/8 | 18 | 76.4 | 0 |
| 4V230-08 | PT1/8 | PT1/4 | 21 | 74.9 | 3 |




## Specifications

| Model | 4V310-08<br>4V320-08 | 4V330C-08<br>4V330E-08<br>4V330P-08 | 4V310-10<br>4V320-10 | 4V330C-10<br>4V330E-10<br>4V330P-10 |
|---|---|---|---|---|
| Fluid | Air(to be filtered by 40μm filter element) | | | |
| Acting | Internal pilot or external pilot | | | |
| Port size ① | In=Out=Exhaust=PT1/4 | | In=Out=PT3/8 Exhaust=PT1/4 | |
| Orifice size | 25.0mm²(Cv=1.40) | 18.0mm²(Cv=1.00) | 30.0mm²(Cv=1.68) | 18.0mm²(Cv=1.00) |
| Valve type | 5 port 2 position | 5 port 3 position | 5 port 2 position | 5 port 3 position |
| Operating pressure | 0.15~0.8MPa(21~114psi) | | | |
| Proof pressure | 1.2MPa(175psi) | | | |
| Temperature ℃ | -20~70 | | | |
| Material of body | Aluminum alloy | | | |
| Lubrication ② | Not required | | | |
| Max. frequency ③ | 4 cycle/sec | 3 cycle/sec | 4 cycle/sec | 3 cycle/sec |
| Weight(g) | 4V310-08:310<br>4V320-08:400 | 450 | 4V310-10:310<br>4V320-10:400 | 450 |

① PT thread, G thread and NPT thread are available.
② Once lubricated air is used, continue with same medium to optimise valve life span. Lubricants like ISO VG32 or equivalent are recommended.
③ The maximum actuation frequency is in the no-load state.

## Symbol

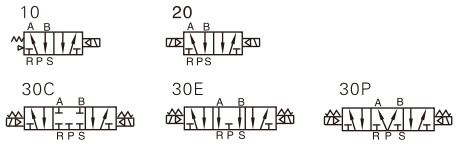


## Product feature

1. Pilot-oriented mode: Internal pilot or external pilot.
2. Structure in sliding column mode: good tightness and sensitive reaction.
3. Three position solenoid valves have three kinds of central functionfor your choice.
4. Double control solenoid valves have memory function.
5. Internal hole adopts special processing technology which has little attrition friction, low start pressure and long service life.
6. No need to add oil for lubrication.
7. It is available to form integrated valve group with the base to save installation space.
8. Affiliated manual devices are equipped to facilitate installation and debugging.
9. Several standard voltage grades are optional.

## Coil specifications

| Item | specifications | | | | |
|---|---|---|---|---|---|
| Standard voltage | AC220V | AC110V | AC24V | DC24V | DC12V |
| Scope of voltage | AC: ±15% DC: ±10% | | | | |
| Power consumption | 4.5VA | 4.5VA | 5.0VA | 3.0W | 3.0W |
| Protection | IP65(DIN40050) | | | | |
| Temperature classification | B Class | | | | |
| Electrical entry | Terminal, Grommet | | | | |
| Activating time | 0.05 sec and below | | | | |

## Ordering code

**4V** **3** **10** **10** **A** □ □ – **W**

**Model**

| | |
|---|---|
| 4V | Solenoid valve (5/2, 5/3 way) |

**Code**

| | |
|---|---|
| 3 | 300 Series |

**Valve type**

| | |
|---|---|
| 10 | Single solenoid 5/2 way |
| 20 | Double solenoid 5/2 way |
| 30C | Double solenoid 5/3 way closed center |
| 30E | Double solenoid 5/3 way exhaust center |
| 30P | Double solenoid 5/3 way pressure center |

**Port size**

| | |
|---|---|
| 08 | 1/4" |
| 10 | 3/8" |

**Voltage**

| | |
|---|---|
| A | AC220V |
| B | DC24V |
| C | AC110V |
| E | AC24V |
| F | DC12V |

**Electrical entry**

| | |
|---|---|
| Blank | Terminal |
| I | Grommet |

**Thread type**

| | |
|---|---|
| Blank | PT |
| G | G |
| T | NPT |

**Pilot type**

Blank: Internal pilot

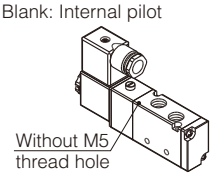


W: External pilot

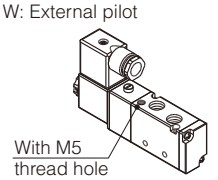


## Flow chart

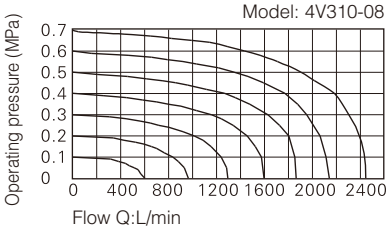


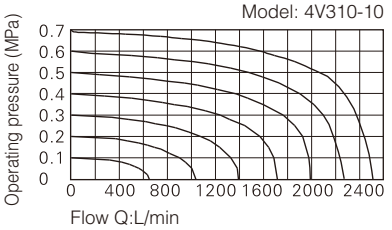

## Inner structure

**4V310**

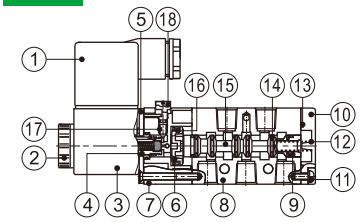


**4V320**

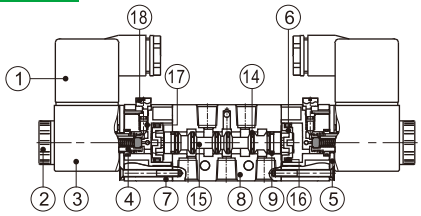


**4V330C**

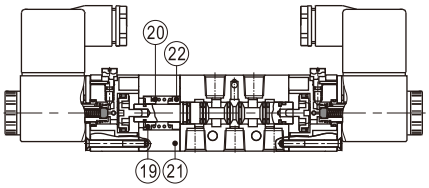


| No. | Item | No. | Item | No. | Item | No. | Item | No. | Item | No. | Item |
|---|---|---|---|---|---|---|---|---|---|---|---|
| 1 | Connector | 5 | Fixed plate | 9 | Wear ring | 13 | Bottom cover gasket | 17 | Override spring | 21 | Side cover |
| 2 | Coil net | 6 | Piston | 10 | Bottom cover | 14 | Spool O-ring | 18 | Manual override | 22 | Spring holder |
| 3 | Coil | 7 | Pilot kit | 11 | Fixed screw | 15 | Spool | 19 | Spring holder | | |
| 4 | Armature | 8 | Body | 12 | Spool spring | 16 | Piston O-ring | 20 | Return spring | | |

## Dimensions

**4V310(Terminal)**

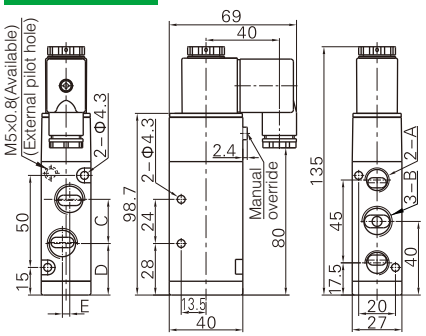


**4V310(Grommet)**

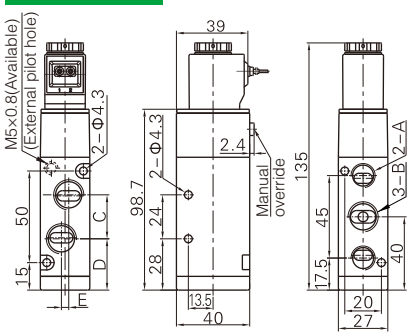


| Model\Item | A | B | C | D | E |
|---|---|---|---|---|---|
| 4V310-08 | PT1/4 | PT1/4 | 22 | 29 | 0 |
| 4V310-10 | PT1/4 | PT3/8 | 24 | 28 | 4 |

**4V320(Terminal)**

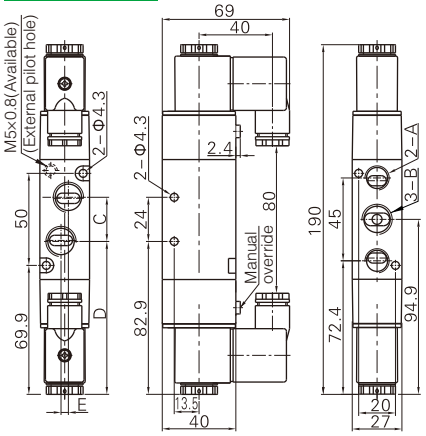


**4V320(Grommet)**

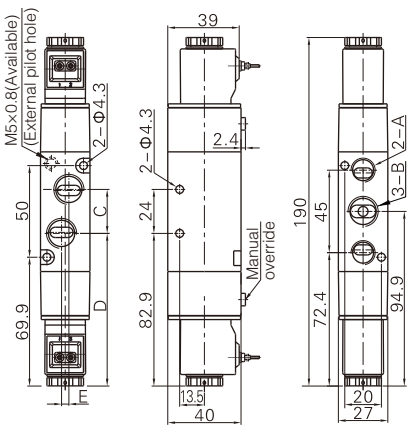


| Model\Item | A | B | C | D | E |
|---|---|---|---|---|---|
| 4V320-06 | PT1/4 | PT1/4 | 22 | 83.9 | 0 |
| 4V320-08 | PT1/4 | PT3/8 | 24 | 82.9 | 4 |

**4V330(Terminal)**

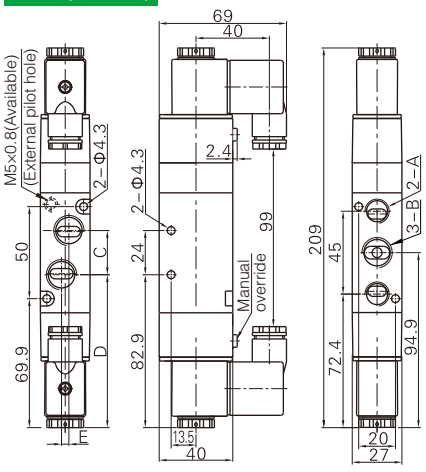


**4V330(Grommet)**

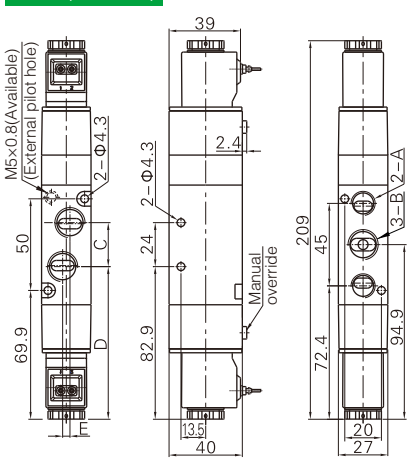


| Model\Item | A | B | C | D | E |
|---|---|---|---|---|---|
| 4V330-06 | PT1/4 | PT1/4 | 22 | 83.9 | 0 |
| 4V330-08 | PT1/4 | PT3/8 | 24 | 82.9 | 4 |




## Specifications

| Model | 4V410-15 | 4V420-15 | 4V430C-15 | 4V430E-15 | 4V430P-15 |
|---|---|---|---|---|---|
| Fluid | Air(to be filtered by 40μm filter element) | | | | |
| Acting | Internal pilot or external pilot | | | | |
| Port size ① | In=Out=Exhaust=PT1/2 | | | | |
| Orifice size | 50.0mm²(Cv=2.79) | | 30.0mm²(Cv=1.68) | | |
| Valve type | 5 port 2 position | | 5 port 3 position | | |
| Operating pressure | 0.15~0.8MPa(21~114psi) | | | | |
| Proof pressure | 1.2MPa(175psi) | | | | |
| Temperature ℃ | -20~70 | | | | |
| Material of body | Aluminum alloy | | | | |
| Lubrication ② | Not required | | | | |
| Max. frequency ③ | 3 cycle/sec | | | | |
| Weight(g) | 590 | 720 | 770 | | |

① PT thread, G thread and NPT thread are available.
② Once lubricated air is used, continue with same medium to optimise valve life span. Lubricants like ISO VG32 or equivalent are recommended.
③ The maximum actuation frequency is in the no-load state.

## Symbol

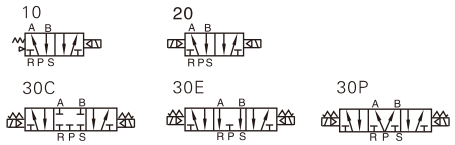


## Product feature

1. Pilot-oriented mode: Internal pilot or external pilot.
2. Structure in sliding column mode: good tightness and sensitive reaction.
3. Three position solenoid valves have three kinds of central functionfor your choice.
4. Double control solenoid valves have memory function.
5. Internal hole adopts special processing technology which has little attrition friction, low start pressure and long service life.
6. No need to add oil for lubrication.
7. It is available to form integrated valve group with the base to save installation space.
8. Affiliated manual devices are equipped to facilitate installation and debugging.
9. Several standard voltage grades are optional.

## Coil specifications

| Item | specifications | | | | |
|---|---|---|---|---|---|
| Standard voltage | AC220V | AC110V | AC24V | DC24V | DC12V |
| Scope of voltage | AC: ±15% DC: ±10% | | | | |
| Power consumption | 4.5VA | 4.5VA | 5.0VA | 3.0W | 3.0W |
| Protection | IP65(DIN40050) | | | | |
| Temperature classification | B Class | | | | |
| Electrical entry | Terminal, Grommet | | | | |
| Activating time | 0.05 sec and below | | | | |

## Ordering code

**4V** **4** **10** **15** **A** □ □ – **W**

**Model**

| | |
|---|---|
| 4V | Solenoid valve (5/2, 5/3 way) |

**Code**

| | |
|---|---|
| 3 | 300 Series |

**Valve type**

| | |
|---|---|
| 10 | Single solenoid 5/2 way |
| 20 | Double solenoid 5/2 way |
| 30C | Double solenoid 5/3 way closed center |
| 30E | Double solenoid 5/3 way exhaust center |
| 30P | Double solenoid 5/3 way pressure center |

**Port size**

| | |
|---|---|
| 12 | 1/2" |

**Voltage**

| | |
|---|---|
| A | AC220V |
| B | DC24V |
| C | AC110V |
| E | AC24V |
| F | DC12V |

**Electrical entry**

| | |
|---|---|
| Blank | Terminal |
| I | Grommet |

**Thread type**

| | |
|---|---|
| Blank | PT |
| G | G |
| T | NPT |

**Pilot type**

Blank: Internal pilot

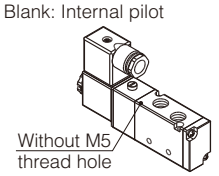


W: External pilot

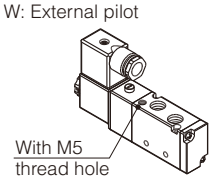


## Flow chart

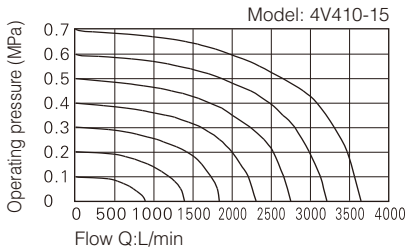

## Inner structure

**4V410**

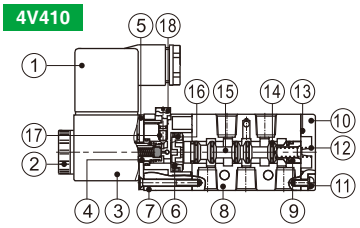


**4V420**

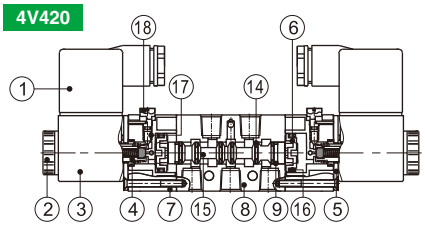


**4V430C**

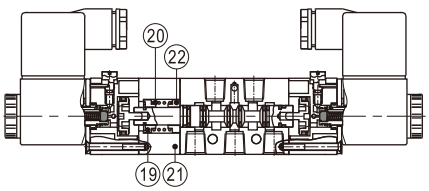


| No. | Item | No. | Item | No. | Item | No. | Item | No. | Item | No. | Item |
|---|---|---|---|---|---|---|---|---|---|---|---|
| 1 | Connector | 5 | Fixed plate | 9 | Wear ring | 13 | Bottom cover gasket | 17 | Override spring | 21 | Side cover |
| 2 | Coil net | 6 | Piston | 10 | Bottom cover | 14 | Spool O-ring | 18 | Manual override | 22 | Spring holder |
| 3 | Coil | 7 | Pilot kit | 11 | Fixed screw | 15 | Spool | 19 | Spring holder | | |
| 4 | Armature | 8 | Body | 12 | Spool spring | 16 | Piston O-ring | 20 | Return spring | | |

## Dimensions

**4V410(Terminal)**

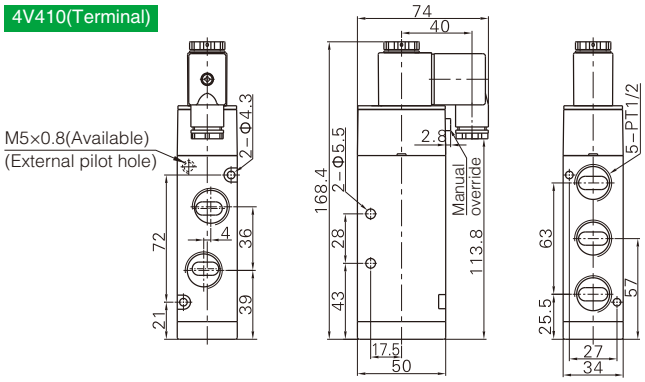


**4V410(Grommet)**

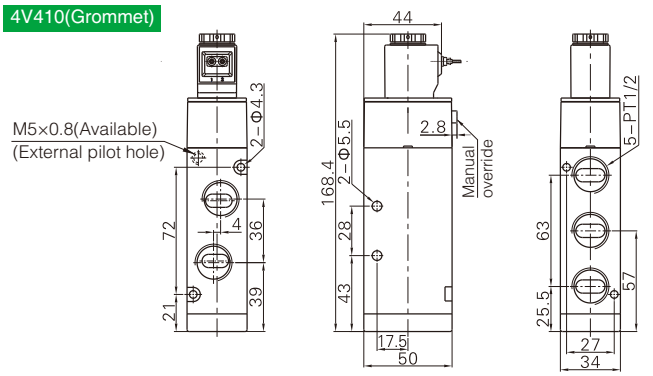


**4V420(Terminal)**

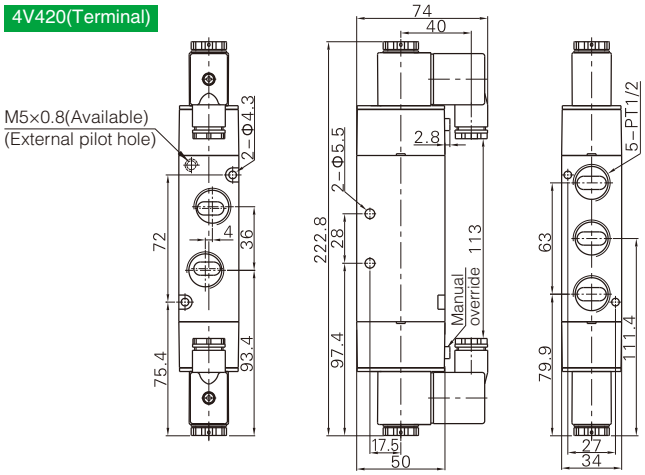


**4V420(Grommet)**

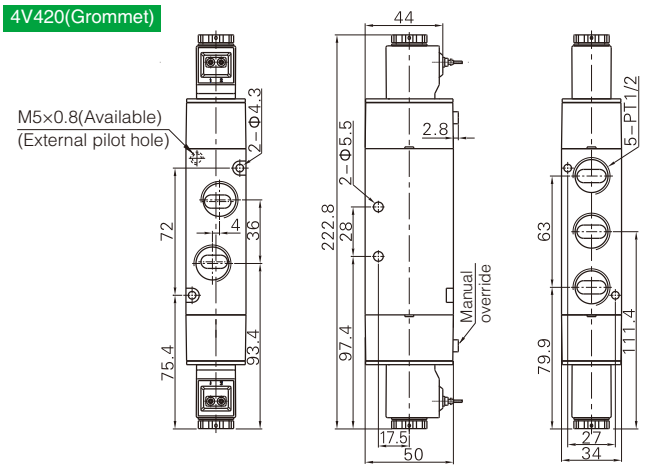


**4V430(Terminal)**

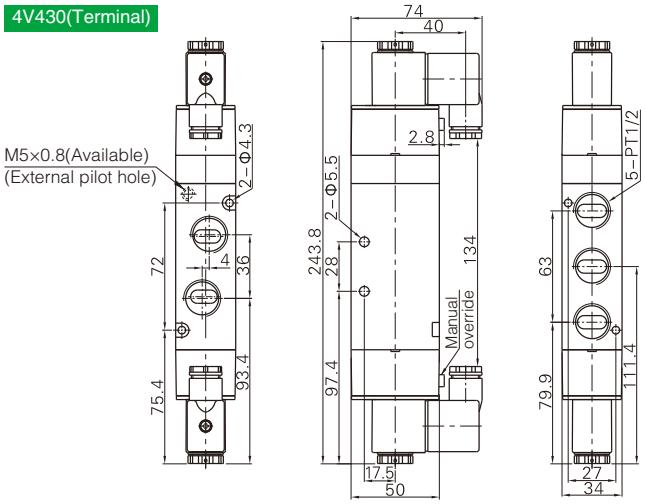


**4V430(Grommet)**

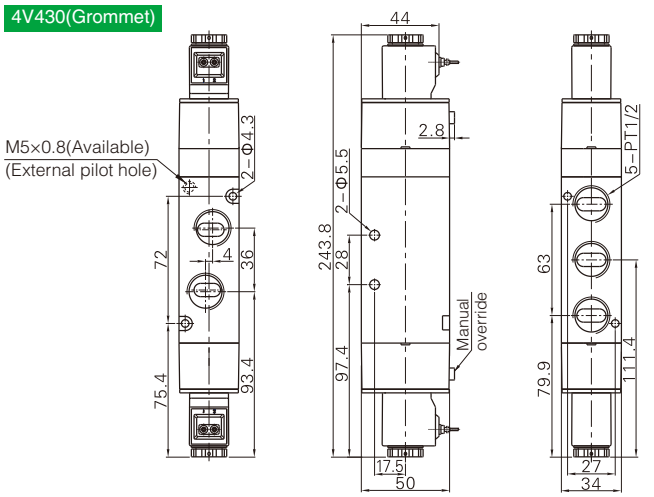

# HY Series
## S1 Stainless Steel Solenoid Valve

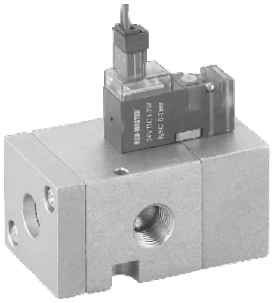

### Ordering code

| HY | S1 | 02 |
|---|---|---|
| Size code | Structure type | Port size |
| HY Stainless steel valve | S1 Two-position Three-way | 02 G1/8 |

### Specifications

| Model | HY-S1-02 |
|---|---|
| Structure type | 2/3 |
| Port size | G1/8" BSP, NPT G1/8" |
| Naminal dia | Air |
| Acting mode | Internal piloted |
| Working voltage | DC12V, DC24V |
| Connection mode | Terminal/Grommet |
| Frequency | 5 Cycles/Sec |
| Response time | 0.05 secretary |

### Dimensions

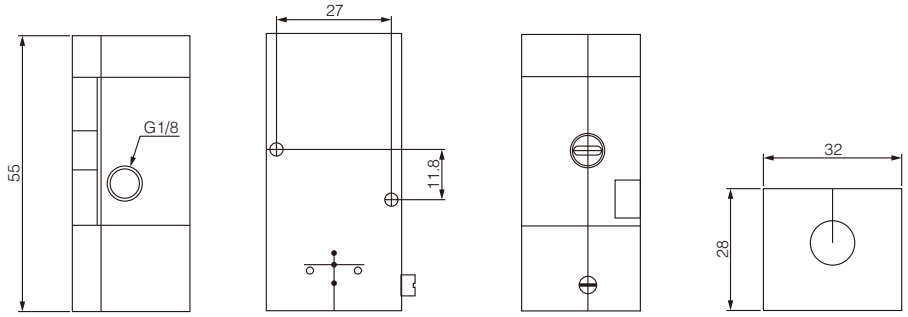


# HY Series S2 Namer Valve

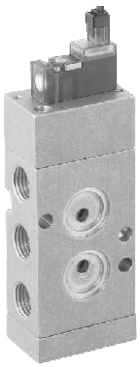

### Ordering code

| HY | S2 | 02 |
|---|---|---|
| Size code | Structure type | Port size |
| HY Stainless steel valve | S2 Two-position Five-way | 02 G1/4 |

### Specifications

| Model | HY-S2-02 |
|---|---|
| Structure type | 2/5 |
| Port size | G1/8" BSP, NPT G1/8" |
| Naminal dia | Air |
| Acting mode | Internal piloted |
| Working voltage | DC12V, DC24V |
| Connection mode | Terminal/Grommet |
| Frequency | 5 Cycles/Sec |
| Response time | 0.05 secretary |

### Dimensions

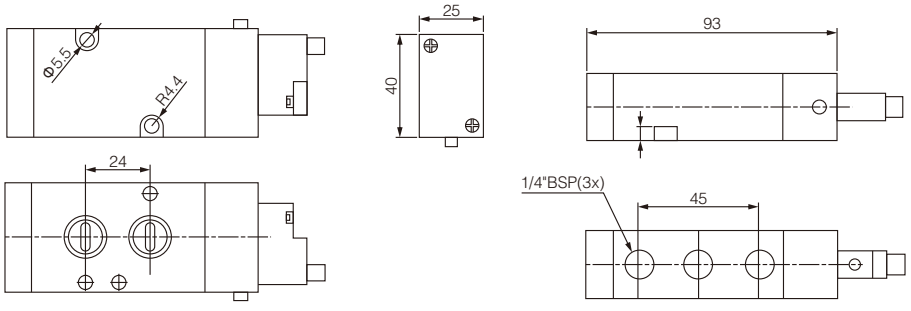

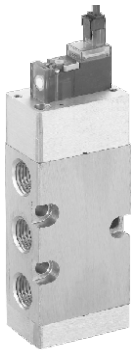

## Ordering code

| HY | S3 | 02 |
|---|---|---|
| **Size code** | **Structure type** | **Port size** |
| HY Stainless steel valve | S3 Two-position Five-way | 02 G1/4 |

## Specifications

| Model | HY-S3-02 |
|---|---|
| Structure type | 2/5 |
| Port size | G1/4" BSP, NPT G1/4" |
| Naminal dia | Air |
| Acting mode | Internal piloted |
| Working voltage | DC12V, DC24V |
| Connection mode | Terminal/Grommet |
| Frequency | 5 Cycles/Sec |
| Response time | 0.05 secretary |

## Dimensions

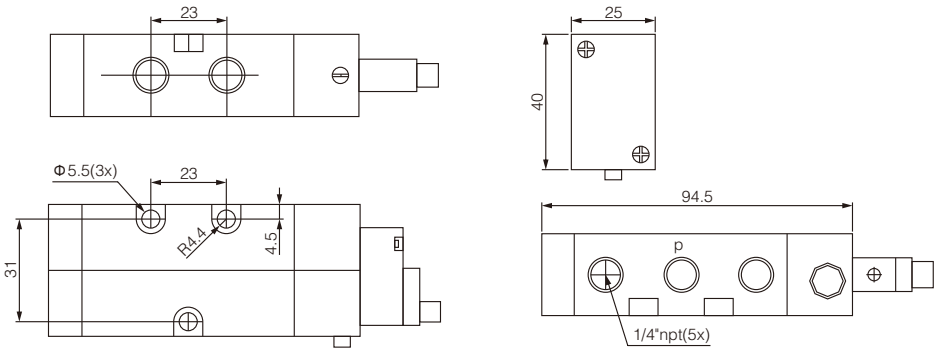


# HY Series S4 Stainless Steel Air Control Valve



## Ordering code

| HY | S4 | 02 |
|---|---|---|
| **Size code** | **Structure type** | **Port size** |
| HY Stainless steel valve | S4 Two-position Five-way | 02 G3/8 |

## Specifications

| Model | HY-S4-02 |
|---|---|
| Structure type | 2/5 |
| Port size | G3/8" BSP, NPT G3/8" |
| Naminal dia | Air |
| Working pressure | 0.25~1.0MPa |

## Dimensions

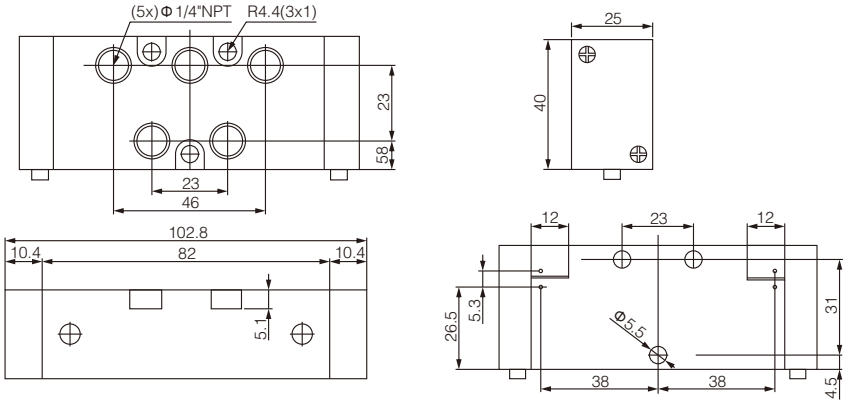



## Specifications

| Model | 4M110-M5<br>4M120-M5 | 4M110-06<br>4M120-06 | 4M210-06<br>4M220-06 | 4M210-08<br>4M220-08 | 4M310-08<br>4M320-08 | 4M310-10<br>4M320-10 |
|---|---|---|---|---|---|---|
| Fluid | Air(to be filtered by 40μm filter element) | | | | | |
| Acting | Internal piloted | | | | | |
| Port size ① | In=Exhaust<br>=M5 | In=Exhaust<br>=PT1/8 | In=Exhaust<br>=PT1/8 | In=PT1/4<br>Exhaust=PT1/8 | In=Exhaust<br>=PT1/4 | In=PT3/8<br>Exhaust=PT1/4 |
| Orifice size | 5.5mm²<br>(Cv=0.31) | 12.0mm²<br>(Cv=0.67) | 14.0mm²<br>(Cv=0.78) | 16.0mm²<br>(Cv=0.89) | 25.0mm²<br>(Cv=1.40) | 30.0mm²<br>(Cv=1.68) |
| Valve type | 5 port 2 position | | | | | |
| Operating pressure | 0.15~0.8MPa(21~114psi) | | | | | |
| Proof pressure | 1.2MPa(175psi) | | | | | |
| Temperature ℃ | -20~70 | | | | | |
| Material of body | Aluminum alloy | | | | | |
| Lubrication ② | Not required | | | | | |
| Max. frequency ③ | 5 cycle/sec | | | | 4 cycle/sec | |
| Weight(g) | 4M110:120 | 4M120:175 | 4M210:220 | 4M220:320 | 4M310:310 | 4M320:400 |

① PT thread, G thread and NPT thread are available.
② Once lubricated air is used, continue with same medium to optimise valve life span. Lubricants like ISO VG32 or equivalent are recommended.
③ The maximum actuation frequency is in the no-load state.

## Symbol

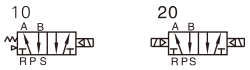


## Product feature

1. Internally piloted structure.
2. Structure in sliding column mode: good tightness and sensitive reaction.
3. Double control solenoid valves have memory function.
4. Internal hole adopts special processing technology which has little attrition friction, low start pressure and long service life.
5. No need to add oil for lubrication.
6. Install in the side plate with the surface upward, which can be used by directly connecting with the actuators.
7. Affiliated manual devices are equipped to facilitate installation and debugging.
8. Several standard voltage grades are optional.

## Flow chart

Please refer to the same types of 4V series solenoid valves.

## Coil specifications

| Item | 4M110 4M120 | | | | | 4M210 4M220 4M310 4M320 | | | | |
|---|---|---|---|---|---|---|---|---|---|---|
| Standard voltage | AC220V | AC110V | AC24V | DC24V | DC12V | AC220V | AC110V | AC24V | DC24V | DC12V |
| Scope of voltage | AC: ±15% DC: ±10% | | | | | | | | | |
| Power consumption | 3.5VA | 3.5VA | 4.0VA | 2.5VA | 2.5VA | 4.5VA | 4.5VA | 5.0VA | 3.0W | 3.0W |
| Protection | IP65(DIN40050) | | | | | | | | | |
| Temperature classification | B Class | | | | | | | | | |
| Electrical entry | Terminal, Grommet | | | | | | | | | |
| Activating time | 0.05 sec and below | | | | | | | | | |

## Ordering code

**4M** — Model

| | |
|---|---|
| 4M | 4V: Solenoid valve (5/2 way NAMUR type) |

**3** — Code

| | |
|---|---|
| 1 | 100 Series |
| 2 | 200 Series |
| 3 | 300 Series |

**10** — Valve type

| | |
|---|---|
| 10 | Single solenoid |
| 20 | Double solenoid |

**10** — Port size

| | |
|---|---|
| M5 | M5 |
| 06 | 1/8" |
| 08 | 1/4" |
| 10 | 3/8" |

**A** — Voltage

| | |
|---|---|
| A | AC220V |
| B | DC24V |
| C | AC110V |
| E | AC24V |
| F | DC12V |

□ — Electrical entry

| | |
|---|---|
| Blank | Terminal |
| I | Grommet |

□ — Thread type

| Port size | Thread type |
|---|---|
| 1/8" | Blank: PT |
| 1/4" | G: G |
| 3/8" | T: NPT |
| M5 | Not this code |

## Inner structure

**Single solenoid**

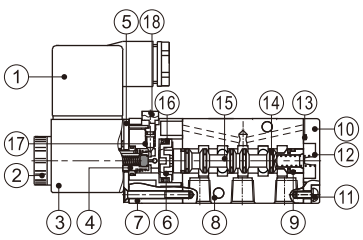


**Double solenoid**

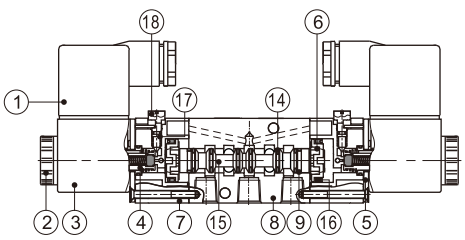


| No. | Item | No. | Item |
|---|---|---|---|
| 1 | Connector | 10 | Bottom cover |
| 2 | Coil net | 11 | Fixed screw |
| 3 | Coil | 12 | Spool spring |
| 4 | Armature | 13 | Bottom cover gasket |
| 5 | Fixed plate | 14 | Spool O-ring |
| 6 | Piston | 15 | Spool |
| 7 | Pilot kit | 16 | Piston O-ring |
| 8 | Body | 17 | Override spring |
| 9 | Wear ring | 18 | Manual override |

## Dimensions

### 4M110(Terminal)

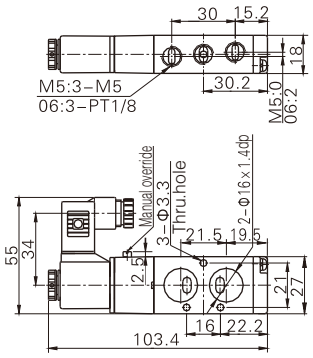


### 4M210(Terminal)

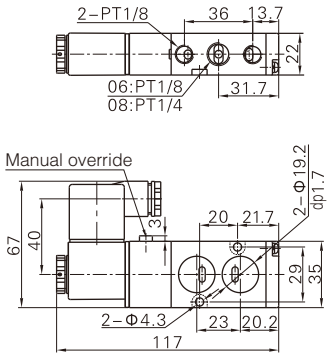


### 4M310(Terminal)

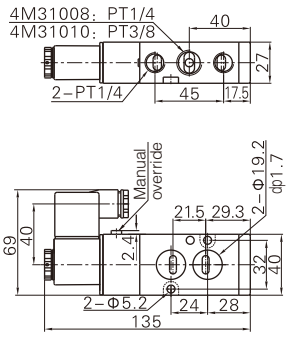


### 4M120(Terminal)

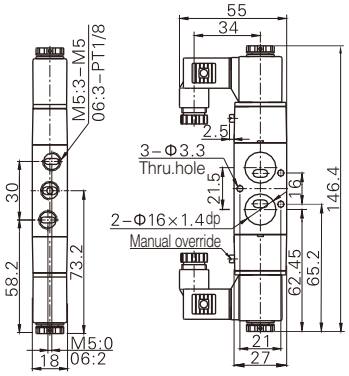


### 4M220(Terminal)

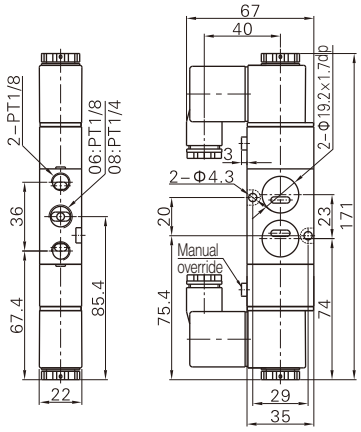


### 4M320(Terminal)

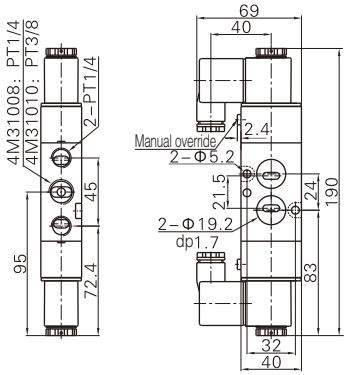


### 4M110(Grommet)

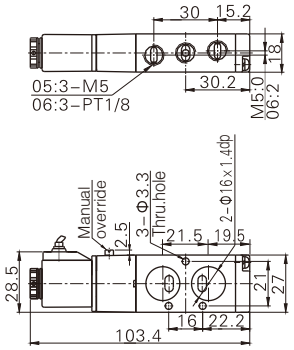


### 4M210(Grommet)

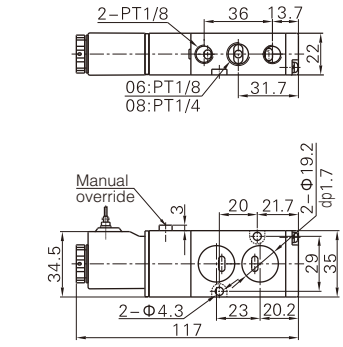


### 4M310(Grommet)

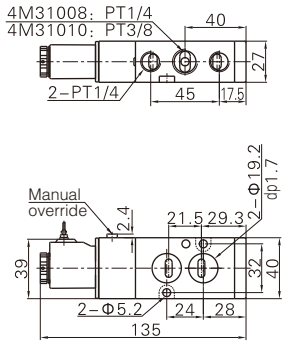


### 4M120(Grommet)

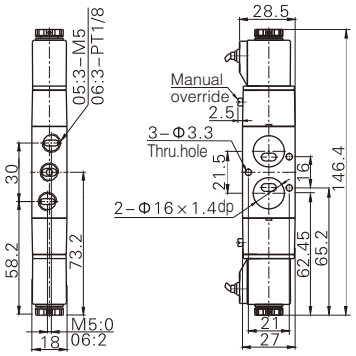


### 4M220(Grommet)

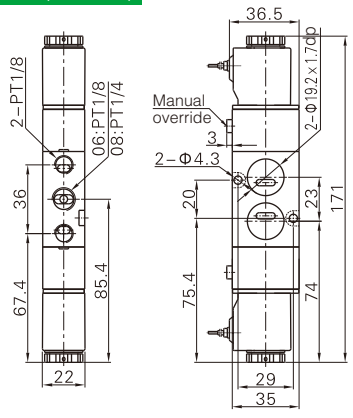


### 4M320(Grommet)

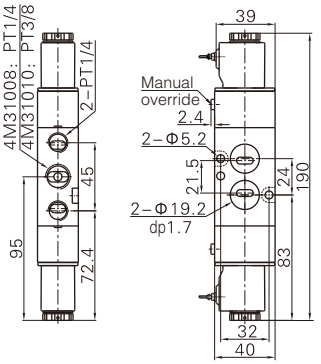



## Specifications

| Model | 5V110-M5 | 5V120-M5 | 5V130□-M5 | 5V110-06 | 5V120-06 | 5V130□-06 |
|---|---|---|---|---|---|---|
| Port size ① | In=Out=Exhaust=M5 | | | In=Out=Exhaust=PT1/8 | | |
| Orifice size | 5.5mm² | | 5.0mm² | 12.0mm² | | 9.0mm² |
| Cv value | 0.31 | | 0.28 | 0.67 | | 0.50 |
| Weight(g) | 120 | 175 | 200 | 120 | 175 | 200 |
| **Model** | **5V210-06** | **5V220-06** | **5V230□-06** | **5V210-08** | **5V220-08** | **5V230□-08** |
| Port size ① | In=Out=Exhaust=PT1/8 | | | In=Out=PT1/4 Exhaust=PT1/8 | | |
| Orifice size | 14.0mm² | | 12.0mm² | 16.0mm² | | 12.0mm² |
| Cv value | 0.78 | | 0.67 | 0.89 | | 0.67 |
| Weight(g) | 220 | 320 | 360 | 220 | 320 | 360 |
| **Model** | **5V310-08** | **5V320-08** | **5V330□-08** | **5V310-10** | **5V320-10** | **5V330□-10** |
| Port size ① | In=Out=Exhaust=PT1/4 | | | In=Out=PT3/8 Exhaust=PT1/4 | | |
| Orifice size | 30.0mm² | | 18.0mm² | 36.0mm² | | 21.5mm² |
| Cv value | 1.68 | | 1.00 | 2.00 | | 1.20 |
| Weight(g) | 310 | 400 | 450 | 310 | 400 | 450 |
| Max. frequency ② | 5 cycle/sec | | 3 cycle/sec | 5 cycle/sec | | 3 cycle/sec |
| **Model** | **5V410-15** | **5V420-15** | **5V430□-15** | | | |
| Port size | In=Out=Exhaust=PT1/2 | | | | | |
| Orifice size | | | | | | |
| Cv value | | | | | | |
| Weight(g) | 590 | 720 | 770 | | | |
| Max. frequency ② | 3 cycle/sec | | 3 cycle/sec | | | |
| Valve type | 5 port 2 position | | 5 port 3 position | 5 port 2 position | | 5 port 3 position |
| Fluid | Air(to be filtered by 40μm filter element) | | | | | |
| Acting | Internal piloted | | | | | |
| Operating pressure | 0.15~0.8MPa(21~114psi) | | | | | |
| Proof pressure | 1.2MPa(175psi) | | | | | |
| Temperature ℃ | -20~70 | | | | | |
| Material of body | Aluminum alloy | | | | | |
| Lubrication ③ | Not required | | | | | |

① PT thread, G thread and NPT thread are available.
② Once lubricated air is used, continue with same medium to optimise valve life span. Lubricants like ISO VG32 or equivalent are recommended.
③ The maximum actuation frequency is in the no-load state.

## Symbol

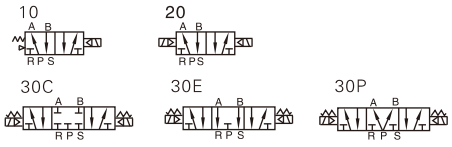


## Product feature

1. Low power consumption, high working frequency, no lubrication required;
2. Terminal type power supply mode, pilot air flow centralized, inner row, suitable for pollution-free and other special needs of the workplace;
3. Sliding column structure, good sealing, sensitive response, there are a variety of standard voltage levels for selection;
4. Three position solenoid valve, there are three kinds of central functions to choose from; double head two position solenoid valve with memory function;
5. The inner hole is processed by special technology. The friction resistance is small, the starting pressure is low and the service life is long;
6. Can be integrated with the base valve set, save installation space; attached manual device, conducive to installation and debugging.

## Ordering code

| Item | specifications | | | | |
|---|---|---|---|---|---|
| Standard voltage | AC220V | AC110V | AC24V | DC24V | DC12V |
| Scope of voltage | AC: ±15%~-10% DC: ±10% | | | | |
| Power consumption | 2.0VA | | | 1.6W | |
| Protection | Dustproof | | | | |
| Temperature classification | B Class | | | | |
| Electrical entry | Terminal | | | | |

## Ordering code

**5V** — **Model**

| | |
|---|---|
| 5V | Solenoid valve (5/2, 5/3 way) |

**2** — **Code**

| | |
|---|---|
| 1 | 100 Series |
| 2 | 200 Series |
| 3 | 300 Series |
| 4 | 400 Series |

**10** — **Valve type**

| | |
|---|---|
| 10 | Single solenoid 5/2 way |
| 20 | Double solenoid 5/2 way |
| 30C | Double solenoid 5/3 way closed center |
| 30E | Double solenoid 5/3 way exhaust center |
| 30P | Double solenoid 5/3 way pressure center |

**08** — **Port size**

| | |
|---|---|
| M5 | M5 |
| 06 | 1/8" |
| 08 | 1/4" |
| 10 | 3/8" |
| 15 | 1/2" |

**B** — **Voltage**

| | |
|---|---|
| A | AC220V |
| B | DC24V |
| C | AC110V |
| E | AC24V |
| F | DC12V |

**□** — **Thread type**

| Port size | Thread type |
|---|---|
| 1/8" 1/4" 3/8" 1/2" | Blank: PT |
| | G: G |
| | T: NPT |
| M5 | Not this code |

**050** — **Terminal length**

| | |
|---|---|
| 050 | 0.5m |
| 200 | 2.0m |

## Inner structure

**5V110**

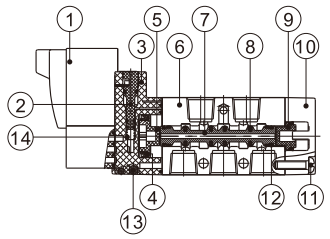


**5V120**

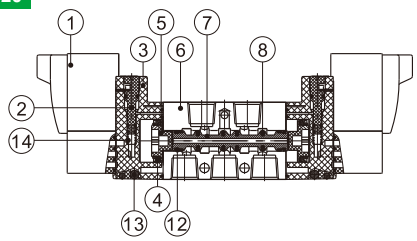


**5V130**

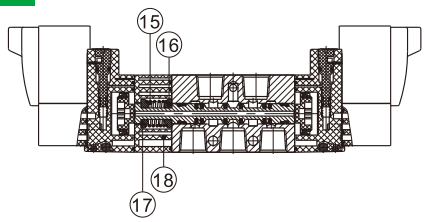


| No. | Item | No. | Item | No. | Item |
|---|---|---|---|---|---|
| 1 | Pilot valve | 7 | Spool | 13 | Steel ball |
| 2 | Manual override | 8 | Spool O-ring | 14 | Spool spring |
| 3 | Pilot kit | 9 | Small piston | 15 | Spool spring |
| 4 | Piston O-ring | 10 | Bottom cover | 16 | Return spring |
| 5 | Large piston | 11 | Fixed screw | 17 | Return spring |
| 6 | Body | 12 | Wear ring | 18 | Side cover |

## Flow chart

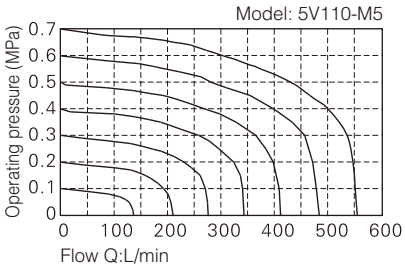


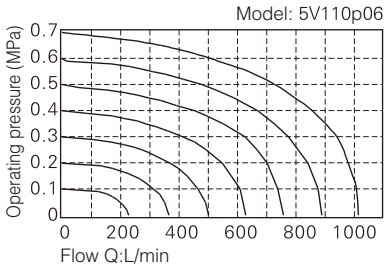


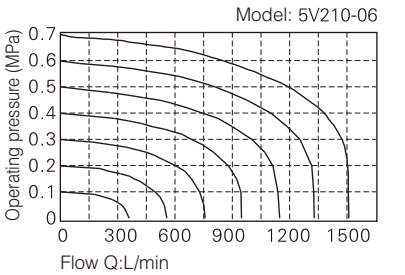


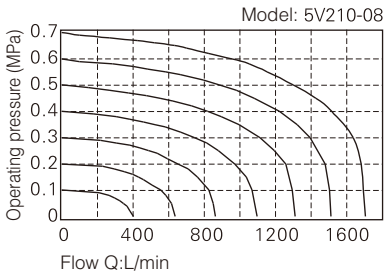


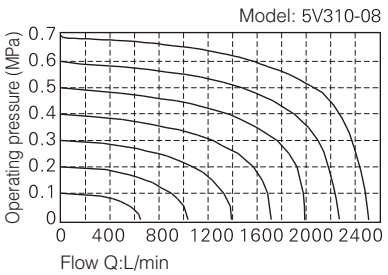


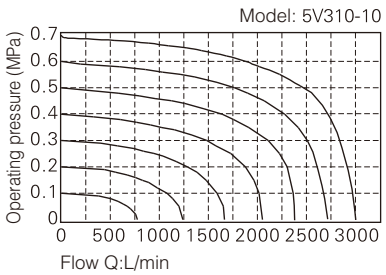


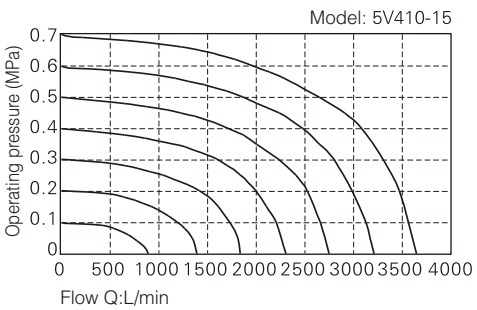


[Note 1] 5V300 series solenoid valve flow,
Larger than the 4V300 series specifications flow.

## Installation and use

1. take the solenoid valve, do not drop it, fall, so as to avoid damage to the solenoid valve;
2. because the electromagnetic pilot valve is a precision component, so installation and commissioning of the solenoid valve, do not let the external touch and hit the pilot valve, so as not to cause damage to the solenoid valve;
3. when using, do not disassemble the solenoid valve, such as accidents caused by the pilot valve screw (M2.5×19) loose, please use 0.4~0.45N.m torque to tighten it;
4. about manual operation:
   4.1. manual operation, please confirm that no danger, then let the connection device for action;
   4.2. non locking push press method: push downward along the arrow direction (right picture)
   4.3. screw press, turn lock type use method:,
   Press it and turn in arrow direction. If not rotated, it is the same as non locking push.

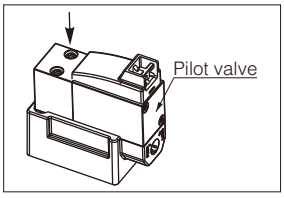


**Attention** Operate with the rotary tool: please turn with the watch and clock screwdriver (torque: 0.1N.m).

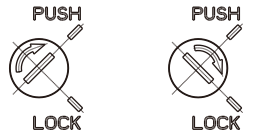


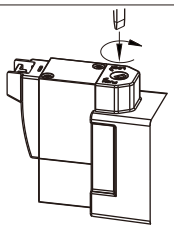

Vertical terminal type

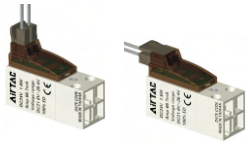

Parallel terminal type

Sub line installation method: vertical terminal type and parallel terminal type share the same wiring terminal, according to the actual use needs, according to the icon insert terminal line can.

## Dimensions

### 5V□10□□□

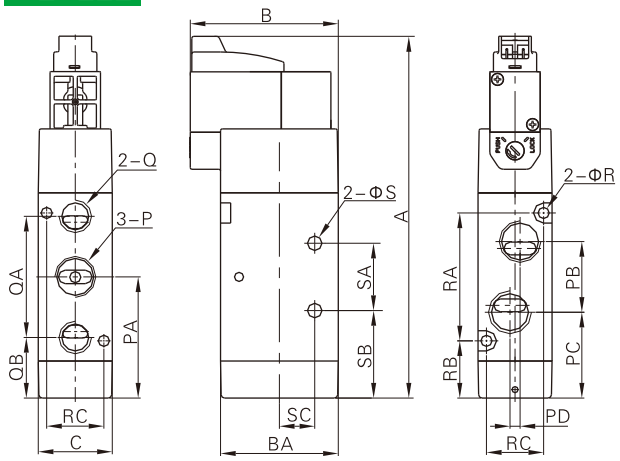


| Model\Item | A | B | BA | C | P | PA | PB | PC | PD | Q |
|---|---|---|---|---|---|---|---|---|---|---|
| 5V100M5 | 98.5 | 44 | 27 | 18 | M5×0.8 | 32 | 14 | 25 | 0 | M5×0.8 |
| 5V11006 | 98.5 | 44 | 27 | 18 | PT1/8 | 32 | 16 | 24 | 3 | PT1/8 |
| 5V21006 | 107.5 | 44 | 35 | 22 | PT1/8 | 36 | 18 | 27 | 0 | PT1/8 |
| 5V21008 | 107.5 | 44 | 35 | 22 | PT1/4 | 36 | 21 | 25.5 | 3 | PT1/8 |
| 5V31008 | 128 | 46 | 40 | 27 | PT1/4 | 46.5 | 22 | 35.5 | 0 | PT1/4 |
| 5V31010 | 128 | 46 | 40 | 27 | PT3/8 | 46.5 | 24 | 34.5 | 4 | PT1/4 |
| 5V41015 | 159 | 50 | 50 | 34 | PT1/2 | 62 | 36 | 44 | 4 | PT1/2 |

| Model\Item | QA | QB | R | RA | RB | RC | S | SA | SB | SC |
|---|---|---|---|---|---|---|---|---|---|---|
| 5V100M5 | 27 | 18 | 3.3 | 30 | 17 | 13 | 3.3 | 14 | 25 | 9.5 |
| 5V11006 | 28 | 18.5 | 3.3 | 30 | 17 | 13 | 3.3 | 14 | 25 | 9.5 |
| 5V21006 | 36 | 18 | 3.3 | 38 | 17 | 17 | 4.3 | 20 | 26 | 10.5 |
| 5V21008 | 36 | 18 | 3.3 | 38 | 17 | 17 | 4.3 | 20 | 26 | 10.5 |
| 5V31008 | 45 | 24 | 4.3 | 50 | 21.5 | 20 | 4.3 | 24 | 34.5 | 13.5 |
| 5V31010 | 45 | 24 | 4.3 | 50 | 21.5 | 20 | 4.3 | 24 | 34.5 | 13.5 |
| 5V41015 | 63 | 30.5 | 4.3 | 72 | 26 | 27 | 5.5 | 28 | 48 | 17.5 |

### 5V□20□□□

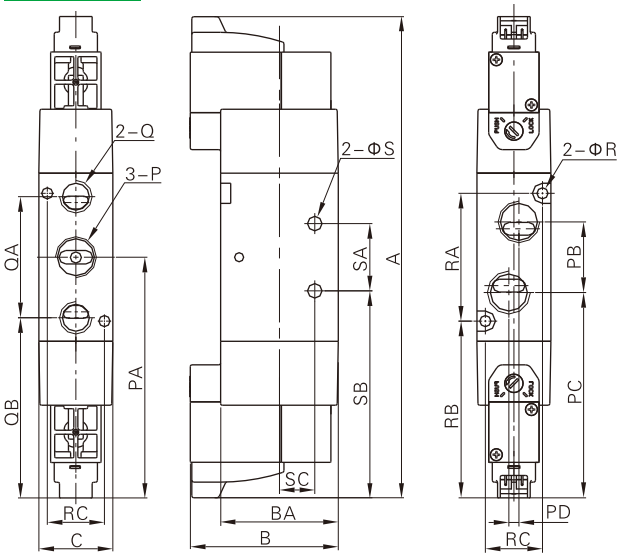


| Model\Item | A | B | BA | C | P | PA | PB | PC | PD | Q |
|---|---|---|---|---|---|---|---|---|---|---|
| 5V120M5 | 133 | 44 | 27 | 18 | M5×0.8 | 66.5 | 14 | 59.5 | 0 | M5×0.8 |
| 5V12006 | 133 | 44 | 27 | 18 | PT1/8 | 66.5 | 16 | 58.5 | 3 | PT1/8 |
| 5V22006 | 143 | 44 | 35 | 22 | PT1/8 | 71.5 | 18 | 62.5 | 0 | PT1/8 |
| 5V22008 | 143 | 44 | 35 | 22 | PT1/4 | 71.5 | 21 | 61 | 3 | PT1/8 |
| 5V32008 | 163 | 46 | 40 | 27 | PT1/4 | 81.5 | 22 | 70.5 | 0 | PT1/4 |
| 5V32010 | 163 | 46 | 40 | 27 | PT3/8 | 81.5 | 24 | 69.5 | 4 | PT1/4 |
| 5V42015 | 194 | 50 | 50 | 34 | PT1/2 | 97 | 36 | 79 | 4 | PT1/2 |

| Model\Item | QA | QB | R | RA | RB | RC | S | SA | SB | SC |
|---|---|---|---|---|---|---|---|---|---|---|
| 5V120M5 | 27 | 53 | 3.3 | 30 | 51.5 | 13 | 3.3 | 14 | 59.5 | 9.5 |
| 5V12006 | 28 | 52.5 | 3.3 | 30 | 51.5 | 13 | 3.3 | 14 | 59.5 | 9.5 |
| 5V22006 | 36 | 53.5 | 3.3 | 38 | 52.5 | 17 | 4.3 | 20 | 61.5 | 10.5 |
| 5V22008 | 36 | 53.5 | 3.3 | 38 | 52.5 | 17 | 4.3 | 20 | 61.5 | 10.5 |
| 5V32008 | 45 | 59 | 4.3 | 50 | 56.5 | 20 | 4.3 | 24 | 69.5 | 13.5 |
| 5V32010 | 45 | 59 | 4.3 | 50 | 56.5 | 20 | 4.3 | 24 | 69.5 | 13.5 |
| 5V42015 | 63 | 65.5 | 4.3 | 72 | 61 | 27 | 5.5 | 28 | 83 | 17.5 |

### 5V□30C(E\P)□□□

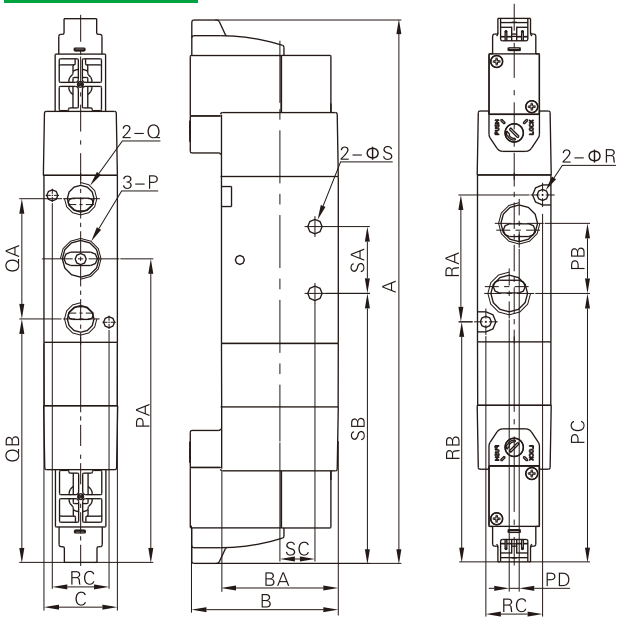


| Model\Item | A | B | BA | C | P | PA | PB | PC | PD | Q |
|---|---|---|---|---|---|---|---|---|---|---|
| 5V130M5 | 146 | 44 | 27 | 18 | M5×0.8 | 79.5 | 14 | 72.5 | 0 | M5×0.8 |
| 5V13006 | 146 | 44 | 27 | 18 | PT1/8 | 79.5 | 16 | 71.5 | 3 | PT1/8 |
| 5V23006 | 162 | 44 | 35 | 22 | PT1/8 | 90.5 | 18 | 81.5 | 0 | PT1/8 |
| 5V23008 | 162 | 44 | 35 | 22 | PT1/4 | 90.5 | 21 | 80 | 3 | PT1/8 |
| 5V33008 | 182 | 46 | 40 | 27 | PT1/4 | 100.5 | 24 | 89.5 | 0 | PT1/4 |
| 5V33010 | 182 | 46 | 40 | 27 | PT3/8 | 100.5 | 24 | 88.5 | 4 | PT1/4 |
| 5V43015 | 215 | 50 | 50 | 34 | PT1/2 | 118 | 36 | 100 | 4 | PT1/2 |

| Model\Item | QA | QB | R | RA | RB | RC | S | SA | SB | SC |
|---|---|---|---|---|---|---|---|---|---|---|
| 5V130M5 | 27 | 66 | 3.3 | 30 | 64.5 | 13 | 3.3 | 14 | 72.5 | 9.5 |
| 5V13006 | 28 | 65.6 | 3.3 | 30 | 64.5 | 13 | 3.3 | 14 | 72.5 | 9.5 |
| 5V23006 | 36 | 72.5 | 3.3 | 38 | 71.5 | 17 | 4.3 | 20 | 80.5 | 10.5 |
| 5V23008 | 36 | 72.5 | 3.3 | 38 | 71.5 | 17 | 4.3 | 20 | 80.5 | 10.5 |
| 5V33008 | 45 | 78 | 4.3 | 50 | 75.5 | 20 | 4.3 | 24 | 88.5 | 13.5 |
| 5V33010 | 45 | 78 | 4.3 | 50 | 75.5 | 20 | 4.3 | 24 | 88.5 | 13.5 |
| 5V43015 | 63 | 86.5 | 4.3 | 72 | 82 | 27 | 5.5 | 28 | 104 | 17.5 |



## Specifications

| Item\Manifold Model | 100M | 200M | 300M |
|---|---|---|---|
| Fluid | Air(to be filtered by 40 μm filter element) | | |
| Temperature ℃ | -20~70 | | |
| Adaptable valve's series | 3V100 Series | 3V200 Series | 3V300 Series |

## Product feature

1. It is available to integrate the direction control valves of the same series to form valve group to save space and cost.
2. It is easy to examine when there are faults owning to the unified air intake and exhaust and unified wiring.
3. Flexible combination and strong expansion capability can make any combination or expansion of the numbers of direction control valves that are connected.

## Ordering code

**Ordering code for manifold**

**3V100M** — **5F** — □

**Model**

| | |
|---|---|
| 3V100M | 100 Series manifold |
| 3V200M | 200 Series manifold |
| 3V300M | 300 Series manifold |

**Number of stations**

| | |
|---|---|
| 1F | 1 Station |
| 2F | 2 Station |
| ····· | |
| 16F | 16 Station |

**Thread type**

| | |
|---|---|
| Blank | PT |
| G | G |
| T | NPT |

**Ordering code for blank plate**

**P** — **3V100M** — **R2**

**Component code**

| | |
|---|---|
| P | Component |

**Model**

| | |
|---|---|
| 3V100M | 100 Series manifold |
| 3V200M | 200 Series manifold |
| 3V300M | 300 Series manifold |

**Blanking plate code**

| | |
|---|---|
| R2 | Blank plate for manifold |

Remark: 1. Ordering code contains the two parts of the manifold' s and the blank plate' s;
2. Manifold kits contains manifold, seal and screw;
3. Blank plate kits contains blank plate and screw.

## Dimensions

**With 3V solenoid valve**

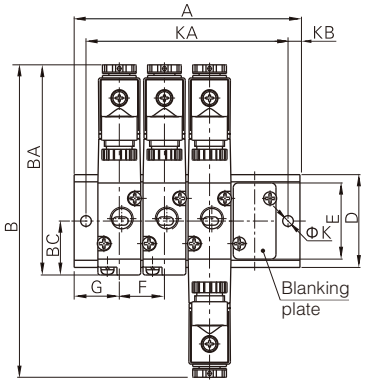


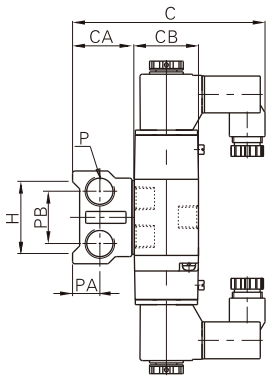


| Model\Item | B | BA | BC | C | CA | CB | D | E | F | G | H | K | KB | P | PA | PB |
|---|---|---|---|---|---|---|---|---|---|---|---|---|---|---|---|---|
| 3V100M | 131.5 | 88.5 | 22.7 | 81 | 26 | 27 | 39 | 32 | 19 | 19 | 30 | 4.5 | 5 | PT1/4 | 11.5 | 22 |
| 3V200M | 162.5 | 109 | 27.7 | 92.5 | 26 | 35 | 45 | 40 | 23 | 23 | 35 | 4.5 | 6 | PT1/4 | 11.5 | 25 |
| 3V300M | 175 | 120 | 32.5 | 99 | 30 | 40 | 52 | 47 | 28 | 27 | 42 | 4.5 | 6 | PT3/8 | 13.5 | 28 |

| Model\Item | A | | | | | | | | | | | | | | | |
|---|---|---|---|---|---|---|---|---|---|---|---|---|---|---|---|---|
| | 1F | 2F | 3F | 4F | 5F | 6F | 7F | 8F | 9F | 10F | 11F | 12F | 13F | 14F | 15F | 16F |
| 3V100M | 38 | 57 | 76 | 95 | 114 | 133 | 152 | 171 | 190 | 209 | 228 | 247 | 266 | 285 | 304 | 323 |
| 3V200M | 46 | 69 | 92 | 115 | 138 | 161 | 184 | 207 | 230 | 253 | 276 | 299 | 322 | 345 | 368 | 391 |
| 3V300M | 54 | 82 | 110 | 138 | 166 | 194 | 222 | 250 | 278 | 306 | 334 | 362 | 390 | 418 | 446 | 474 |

| Model\Item | KA | | | | | | | | | | | | | | | |
|---|---|---|---|---|---|---|---|---|---|---|---|---|---|---|---|---|
| | 1F | 2F | 3F | 4F | 5F | 6F | 7F | 8F | 9F | 10F | 11F | 12F | 13F | 14F | 15F | 16F |
| 3V100M | 28 | 47 | 66 | 85 | 104 | 123 | 142 | 161 | 180 | 199 | 218 | 237 | 256 | 275 | 294 | 313 |
| 3V200M | 34 | 57 | 80 | 103 | 126 | 149 | 172 | 195 | 218 | 241 | 264 | 287 | 310 | 333 | 356 | 379 |
| 3V300M | 42 | 70 | 98 | 126 | 154 | 182 | 210 | 238 | 266 | 294 | 322 | 350 | 378 | 406 | 434 | 462 |



## Specifications

| Item\Manifold Model | 100M | 200M | 300M | 400M |
|---|---|---|---|---|
| Fluid | Air(to be filtered by 40 μm filter element) | | | |
| Temperature ℃ | -20~70 | | | |
| Adaptable valve's series | 4V100 Series | 4V200 Series | 4V300 Series | 4V400 Series |

## Product feature

1. It is available to integrate the direction control valves of the same series to form valve group to save space and cost.
2. It is easy to examine when there are faults owning to the unified air intake and exhaust and unified wiring.
3. Flexible combination and strong expansion capability can make any combination or expansion of the numbers of direction control valves that are connected.

## Ordering code

**Ordering code for manifold**

**4V100M** — **5F** — **□**

**Model**

| | |
|---|---|
| 4V100M | 100 Series manifold |
| 4V200M | 200 Series manifold |
| 4V300M | 300 Series manifold |
| 4V400M | 400 Series manifold |

**Number of stations**

| | |
|---|---|
| 1F | 1 Station |
| 2F | 2 Station |
| ····· | |
| 16F | 16 Station |

**Thread type**

| | |
|---|---|
| Blank | PT |
| G | G |
| T | NPT |

**Ordering code for blank plate**

**P** — **4V100M** — **R2**

**Component code**

| | |
|---|---|
| P | Component |

**Model**

| | |
|---|---|
| 4V100M | 100 Series manifold |
| 4V200M | 200 Series manifold |
| 4V300M | 300 Series manifold |
| 4V400M | 400 Series manifold |

**Blanking plate code**

| | |
|---|---|
| R2 | Blank plate for manifold |

Remark: 1. Ordering code contains the two parts of the manifold' s and the blank plate' s;
2. 100M, 200M series have a maximum of 16 stations ; 300M series have a maximum of 12 stations; 400M series have a maximum of 8 stations.

## Dimensions

**With 4V solenoid valve**

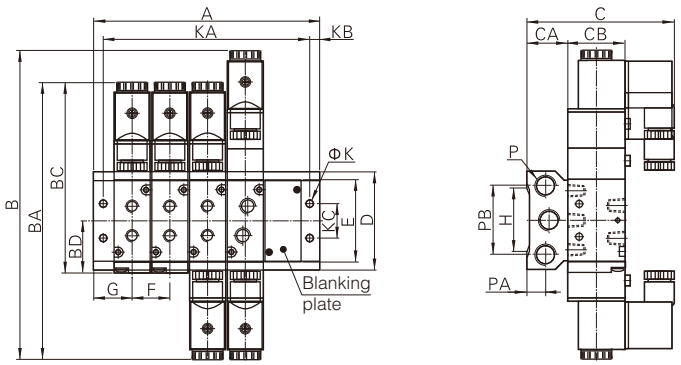


| Model\Item | B | BA | BC | BD | C | CA | CB | D | E | F | G | H | K | KB | KC | P | PA | PB |
|---|---|---|---|---|---|---|---|---|---|---|---|---|---|---|---|---|---|---|
| 100M□F | 154.5 | 142.5 | 99.5 | 28 | 79 | 26 | 27 | 58 | 43 | 19 | 19 | 36 | 4.5 | 5 | 20 | PT1/4 | 12.5 | 40 |
| 200M□F | 189 | 171 | 117 | 31.7 | 93 | 27 | 35 | 61 | 51 | 23 | 23 | 38 | 4.5 | 6 | 21 | PT1/4 | 13 | 43 |
| 300M□F | 208 | 190 | 135 | 40 | 99.5 | 31 | 40 | 75 | 65 | 28 | 27 | 54 | 4.5 | 6 | 26 | PT3/8 | 15 | 53 |
| 400M□F | 243 | 223 | 168.5 | 57 | 112.5 | 39 | 50 | 104 | 94.5 | 35 | 31.5 | 75 | 5.5 | 7 | 32 | PT1/2 | 19 | 68 |

| Model\Item | A | | | | | | | | | | | | | | | |
|---|---|---|---|---|---|---|---|---|---|---|---|---|---|---|---|---|
| | 1F | 2F | 3F | 4F | 5F | 6F | 7F | 8F | 9F | 10F | 11F | 12F | 13F | 14F | 15F | 16F |
| 100M□F | 38 | 57 | 76 | 95 | 114 | 133 | 152 | 171 | 190 | 209 | 228 | 247 | 266 | 285 | 304 | 323 |
| 200M□F | 46 | 69 | 92 | 115 | 138 | 161 | 184 | 207 | 230 | 253 | 276 | 299 | 322 | 345 | 368 | 391 |
| 300M□F | 54 | 82 | 110 | 138 | 166 | 194 | 222 | 250 | 278 | 306 | 334 | 362 | - | - | - | - |
| 400M□F | 63 | 98 | 133 | 168 | 203 | 238 | 273 | 308 | - | - | - | - | - | - | - | - |

| Model\Item | KA | | | | | | | | | | | | | | | |
|---|---|---|---|---|---|---|---|---|---|---|---|---|---|---|---|---|
| | 1F | 2F | 3F | 4F | 5F | 6F | 7F | 8F | 9F | 10F | 11F | 12F | 13F | 14F | 15F | 16F |
| 100M□F | 28 | 47 | 66 | 85 | 104 | 123 | 142 | 161 | 180 | 199 | 218 | 237 | 256 | 275 | 294 | 313 |
| 200M□F | 34 | 57 | 80 | 103 | 126 | 149 | 172 | 195 | 218 | 241 | 264 | 287 | 310 | 333 | 356 | 379 |
| 300M□F | 42 | 70 | 98 | 126 | 154 | 182 | 210 | 238 | 266 | 294 | 322 | 350 | - | - | - | - |
| 400M□F | 49 | 84 | 119 | 154 | 189 | 224 | 259 | 294 | - | - | - | - | - | - | - | - |




## Note of terminal connection

Coil terminal with DC specification has polar indicator lights, thus when wiring, notice positive and negative poles, "1" shall be connected to positive pole, "2" to negative pole. If the poles are connected inversely, the indicator lights will not shine but valve still actuates.

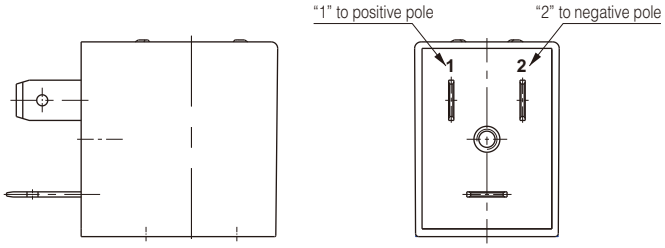


## Ordering code

**CD**

**Coil type**

| | |
|---|---|
| CD | Terminal |
| CL | Grommet |

**A080**

**Coil's bore**

| | |
|---|---|
| A080 | The first product of Φ8.0mm bore) |
| A092 | The first product of Φ9.0mm bore) |

**A**

**Voltage**

| | |
|---|---|
| A | AC220V |
| B | DC24V |
| C | AC110V |
| E | AC24V |
| F | DC12V |

## 080 Series

| Production series | Coil type | Voltage | Coil inside connection deagram | Connector type | Connector inside connection diagram | Memo |
|---|---|---|---|---|---|---|
| 3V100 Series<br>4V100 Series<br>4M100 Series | CDA080<br>Terminal | AC | 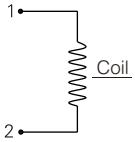 | PL1515T-P1 | – | Applied to CDA080 AC\DC type coil |
| | | | | PL1515T-P2 | 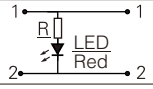 | Applied to CDA080 AC type coil |
| | CDA080<br>Terminal | DC | | PL1515T-P3 | 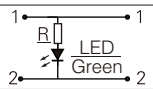 | Applied to CDA080 DC type coil |
| | CLA080<br>Grommet | AC | 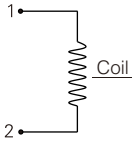 | – | – | – |
| | CLA080<br>Grommet | DC | | – | – | – |

## 092 Series

| Production series | Coil type | Voltage | Coil inside connection deagram | Connector type | Connector inside connection diagram | Memo |
|---|---|---|---|---|---|---|
| 3V100 Series<br>3V200 Series<br>3V300 Series<br>4V200 Series<br>4V300 Series<br>4V400 Series<br>4M200 Series<br>4M300 Series | CDA092<br>Terminal | AC | 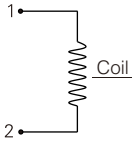 | 4V210-005-P1 | – | Applied to CDA092 AC\DC type coil |
| | | | | 4V210-005-P2 | 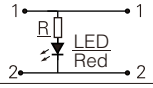 | Applied to CDA092 AC type coil |
| | CDA092<br>Terminal | DC | | 4V210-005-P3 | 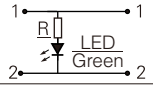 | Applied to CDA092 DC type coil |
| | CLA092<br>Grommet | AC | | – | – | – |
| | CLA092<br>Grommet | DC | | – | – | – |

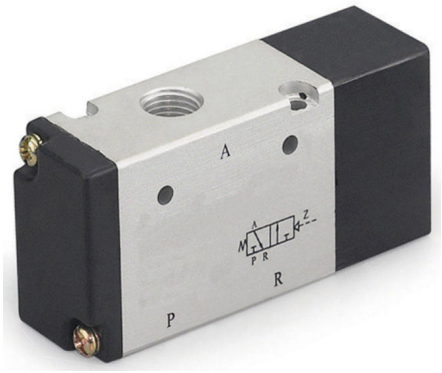


## Specifications

| Model | 3A110-M5 | 3A120-M5 | 3A110-06 | 3A120-06 |
|---|---|---|---|---|
| Fluid | Air(to be filtered by 40 μm filter element) | | | |
| Acting | Exterior control | | | |
| Port size ① | M5 | | PT1/8 | |
| Orifice size | 5.5mm²(Cv=0.31) | | 12.0mm²(Cv=0.67) | |
| Valve type | 3 port 2 porsition | | | |
| Lubrication ② | Not required | | | |
| Operating pressure | 0.15~0.8MPa(21~114psi) | | | |
| Proof pressure | 1.2MPa(175psi) | | | |
| Temperature ℃ | -20~70 | | | |
| Material of body | Aluminum alloy | | | |
| Max. frequency ③ | 5 cycle/sec | | | |

① PT thread, G thread and NPT thread are available.
② Once lubricated air is used, continue with same medium to optimise valve life span. lubricants like ISO VG32 or equivalent are recommended.
③ The maximum actuation frequency is in the no-load state.

## Symbol

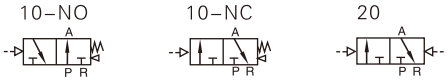


## Ordering code

3A 1 10 06 NO □

**Model**

| | |
|---|---|
| 3A | Air Valve (3/2 way) |

**Code**

| | |
|---|---|
| 1 | 100 Series |

**Valve type**

| | |
|---|---|
| 10 | Single air control |
| 20 | Double air control |

**Port size**

| | |
|---|---|
| M5 | M5 |
| 06 | 1/8" |

**Acting type**

| Valve type | Acting type |
|---|---|
| 10 | NC: Normally close |
| | NC: Normally open |
| 20 | NO code |

**Thread type**

| Port size | Thread type |
|---|---|
| 1/8" | Blank: PT |
| | G: G |
| | T: NPT |
| M5 | No this code |

Please refer to 63 for manifold specification and the order way.

## Product feature

1. Structure in sliding column mode: good tightness and sensitive reaction.
2. Double air control valves have memory function.
3. Internal hole adopts special processing technology which has little attrition friction, low start pressure and long service life.
4. No need to add oil for lubrication.
5. Multi-mounting helps to install and apply.
6. Integrate with the manifold to save installation space.

## Flow chart

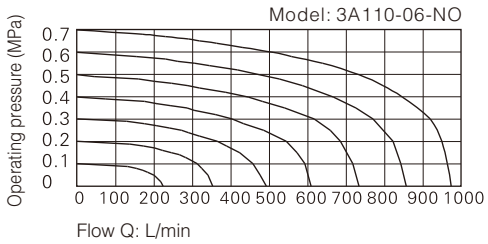


## Inner structure

**3A110**

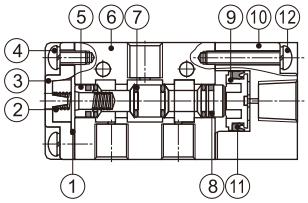


**3A120**

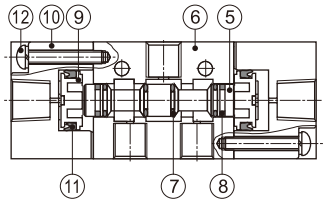


| No. | Item | No. | Item | No. | Item |
|---|---|---|---|---|---|
| 1 | Bottom cover gasket | 5 | Spool | 9 | Piston |
| 2 | Spring | 6 | Body | 10 | Pilot body |
| 3 | Bottom cover | 7 | O-ring | 11 | Piston O-ring |
| 4 | Bottom cover screw | 8 | Wear ring | 12 | Piston screw |

## Dimensions

**3A110**

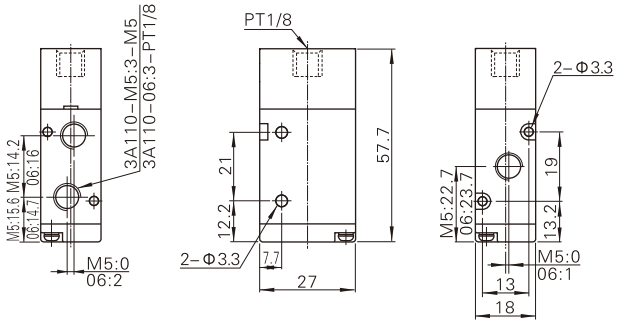


**3A120**

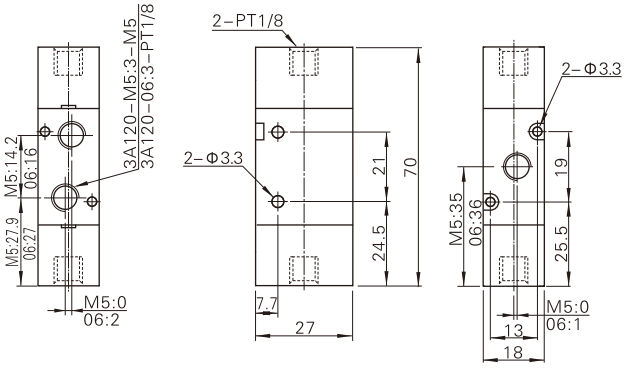



## Specifications

| Model | 3A210-06 | 3A220-06 | 3A210-08 | 3A220-08 |
|---|---|---|---|---|
| Fluid | Air(to be filtered by 40 μm filter element) | | | |
| Acting | Exterior control | | | |
| Port size ① | In=Out=1/8" | | In=Out=1/4" | |
| Orifice size | 14.0mm²(Cv=0.78) | | 16.0mm²(Cv=0.89) | |
| Valve type | 3 port 2 porsition | | | |
| Lubrication ② | Not required | | | |
| Operating pressure | 0.15~0.8MPa(21~114psi) | | | |
| Proof pressure | 1.2MPa(175psi) | | | |
| Temperature ℃ | -20~70 | | | |
| Material of body | Aluminum alloy | | | |
| Max. frequency ③ | 5 cycle/sec | | | |

① PT thread, G thread and NPT thread are available.
② Once lubricated air is used, continue with same medium to optimise valve life span. lubricants like ISO VG32 or equivalent are recommended.
③ The maximum actuation frequency is in the no-load state.

## Symbol

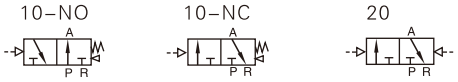


## Product feature

1. Structure in sliding column mode: good tightness and sensitive reaction.
2. Double air control valves have memory function.
3. Internal hole adopts special processing technology which has little attrition friction, low start pressure and long service life.
4. No need to add oil for lubrication.
5. Multi-mounting helps to install and apply.
6. Integrate with the manifold to save installation space.

## Flow chart

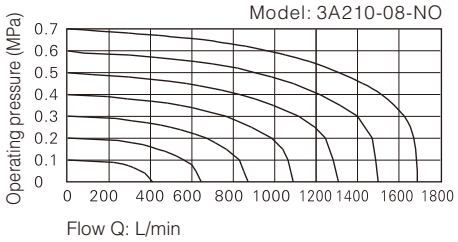


## Ordering code

3A | 2 | 10 | 08 | NO | □

**Model**

| | |
|---|---|
| 3A | Air Valve (3/2 way) |

**Code**

| | |
|---|---|
| 2 | 200 Series |

**Valve type**

| | |
|---|---|
| 10 | Single air control |
| 20 | Double air control |

**Port size**

| | |
|---|---|
| 06 | 1/8" |
| 08 | 1/4" |

**Acting type**

| Valve type | Acting type |
|---|---|
| 10 | NC: Normally close |
| | NC: Normally open |
| 20 | NO code |

**Thread type**

| | |
|---|---|
| Blank | PT |
| G | G |
| T | NPT |

Please refer to 63 for manifold specification and the order way.

## Inner structure

**3A210**

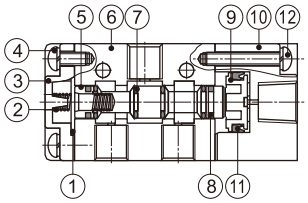


**3A220**

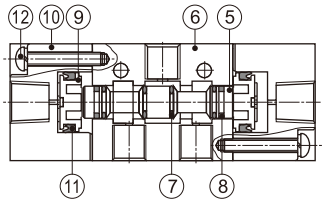


| No. | Item | No. | Item | No. | Item |
|---|---|---|---|---|---|
| 1 | Bottom cover gasket | 5 | Spool | 9 | Piston |
| 2 | Spring | 6 | Body | 10 | Pilot body |
| 3 | Bottom cover | 7 | O-ring | 11 | Piston O-ring |
| 4 | Bottom cover screw | 8 | Wear ring | 12 | Piston screw |

## Dimensions

**3A210**

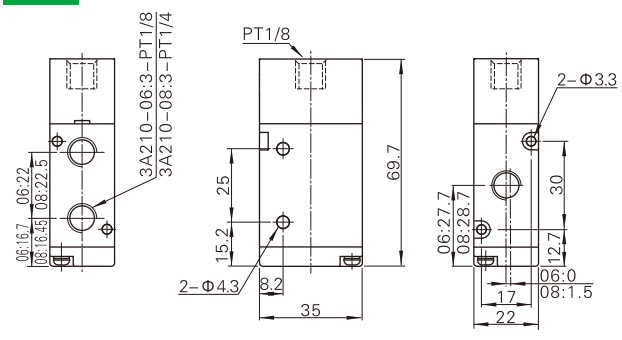


**3A220**

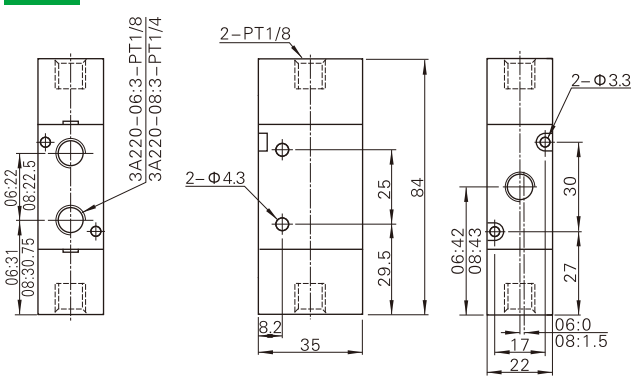




## Specifications

| Model | 3A310-08 | 3A320-08 | 3A310-10 | 3A320-10 |
|---|---|---|---|---|
| Fluid | Air(to be filtered by 40 μm filter element) | | | |
| Acting | Exterior control | | | |
| Port size ① | In=Out=1/4" | | In=Out=3/8" | |
| Orifice size | 25.0mm²(Cv=1.35) | | 30.0mm²(Cv=1.67) | |
| Valve type | 3 port 2 porsition | | | |
| Lubrication ② | Not required | | | |
| Operating pressure | 0.15~0.8MPa(21~114psi) | | | |
| Proof pressure | 1.2MPa(175psi) | | | |
| Temperature ℃ | -20~70 | | | |
| Material of body | Aluminum alloy | | | |
| Max. frequency ③ | 5 cycle/sec | | | |

① PT thread, G thread and NPT thread are available.
② Once lubricated air is used, continue with same medium to optimise valve life span. lubricants like ISO VG32 or equivalent are recommended.
③ The maximum actuation frequency of no-load state.

## Symbol

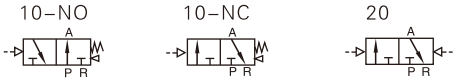


## Ordering code

3A 3 10 10 NO □

| Model | |
|---|---|
| 3A | Air Valve (3/2 way) |

| Code | |
|---|---|
| 3 | 300 Series |

| Valve type | |
|---|---|
| 10 | Single air control |
| 20 | Double air control |

| Port size | |
|---|---|
| 08 | 1/4" |
| 10 | 3/8" |

| Acting type | |
|---|---|
| Valve type | Acting type |
| 10 | NC: Normally close |
| | NC: Normally open |
| 20 | NO code |

| Thread type | |
|---|---|
| Blank | PT |
| G | G |
| T | NPT |

Please refer to 63 for manifold specification and the order way.

## Product feature

1. Structure in sliding column mode: good tightness and sensitive reaction.
2. Double air control valves have memory function.
3. Internal hole adopts special processing technology which has little attrition friction, low start pressure and long service life.
4. No need to add oil for lubrication.
5. Multi-mounting helps to install and apply.
6. Integrate with the manifold to save installation space.

## Flow chart

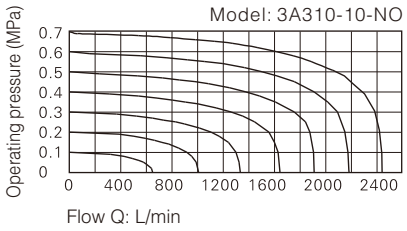


## Inner structure

**3A310**

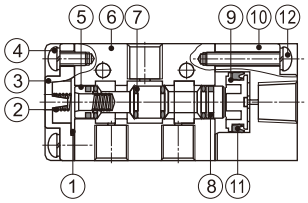


**3A320**

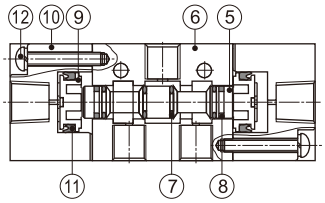


| No. | Item | No. | Item | No. | Item |
|---|---|---|---|---|---|
| 1 | Bottom cover gasket | 5 | Spool | 9 | Piston |
| 2 | Spring | 6 | Body | 10 | Pilot body |
| 3 | Bottom cover | 7 | O-ring | 11 | Piston O-ring |
| 4 | Bottom cover screw | 8 | Wear ring | 12 | Piston screw |

## Dimensions

**3A310**

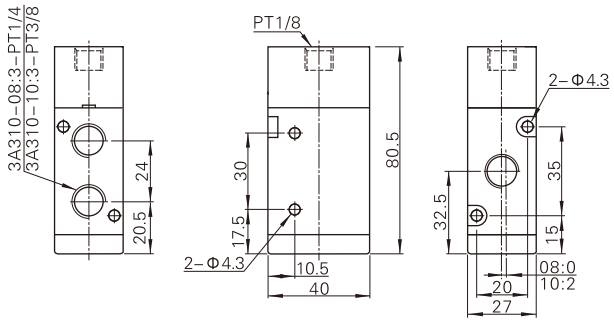


**3A320**

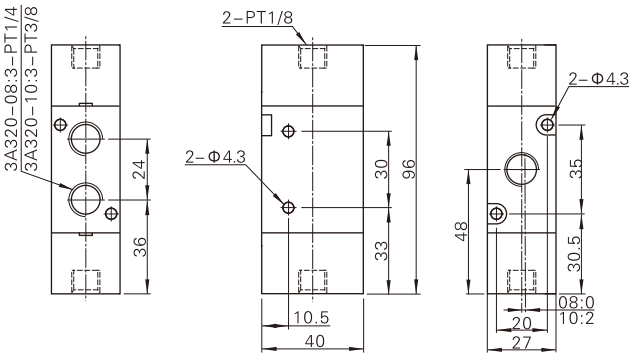




## Specifications

| Model | 4A110-M5<br>4A120-M5 | 4A130C-M5<br>4A130E-M5<br>4A130P-M5 | 4A110-06<br>4A120-06 | 4A130C-06<br>4A130E-06<br>4A130P-06 |
|---|---|---|---|---|
| Fluid | Air(to be filtered by 40 μm filter element | | | |
| Acting | Exterior control | | | |
| Port size ① | In=Out=M5 | | In=Out=1/8" | |
| Orifice size | 5.5mm²(Cv=0.31) | 5.0mm²(Cv=0.28) | 12.0mm²(Cv=0.67) | 9.0mm²(Cv=0.50) |
| Valve type | 5 port 2 porsition | 5 port 3 porsition | 5 port 2 porsition | 5 port 3 porsition |
| Operating pressure | 0.15~0.8MPa(21~114psi) | | | |
| Proof pressure | 1.2MPa(175psi) | | | |
| Temperature ℃ | -20~70 | | | |
| Material of body | Aluminum alloy | | | |
| Lubrication ② | Not required | | | |
| Max. Frequency ③ | 5 cycle/sec | 3 cycle/sec | 5 cycle/sec | 3 cycle/sec |
| Weight (g) | 4A110-M5:85<br>4A120-M5:140 | 165 | 4A110-06:85<br>4A120-06:140 | 165 |

① PT thread, G thread and NPT thread are available.
② Once lubricated air is used, continue with same medium to optimise valve life span. lubricants like ISO VG32 or equivalent are recommended.
③ The maximum actuation frequency is in the no-load state.

## Symbol

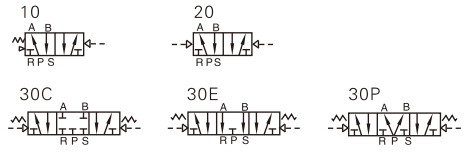


## Product feature

1. Structure in sliding column mode: good tightness and sensitive reaction.
2. Three position air valves have three kinds of central funcition for your choice.
3. Double air control valves have memory function.
4. Internal hole adopts special processing technology which has little attrition friction, low start pressure and long service life.
5. No need to add oil for lubrication.
6. Integrate with the manifold to save installation space.

## Ordering code

**4A** — **Model**

| | |
|---|---|
| 4A | Air valve (5/2, 5/3 way) |

**1** — **Code**

| | |
|---|---|
| 1 | 100 Series |

**10** — **Valve type**

| | |
|---|---|
| 10 | Single air control 5/2 way |
| 20 | Double air control 5/2 way |
| 30C | Double air control 5/3 way closed center |
| 30E | Double air control 5/3 way exhaust center |
| 30P | Double air control 5/3 way pressure center |

**06** — **Port size**

| | |
|---|---|
| M5 | M5 |
| 06 | 1/8" |

□ — **Thread type**

| Port size | Thread type |
|---|---|
| 1/8" | Blank: PT |
| | G: G |
| | T: NPT |
| M5 | No this code |

Please refer to 64 for manifold specification and the order way.

## Flow chart

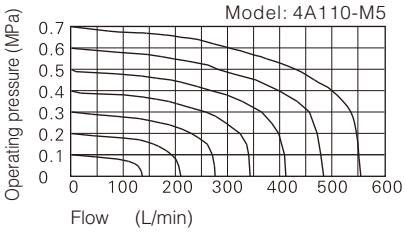


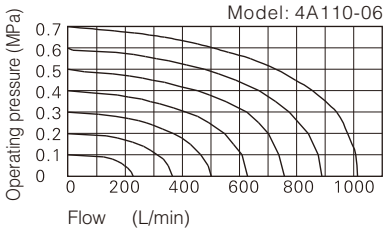

## Inner structure

**4A110**

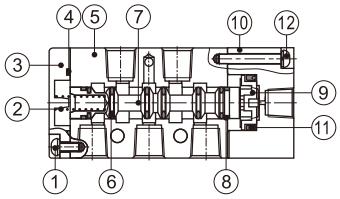


**4A120**

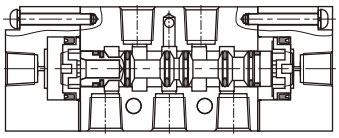

**4A130C**

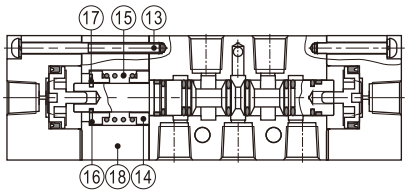


| No. | Item | No. | Item | No. | Item | No. | Item | No. | Item |
|---|---|---|---|---|---|---|---|---|---|
| 1 | Screw | 5 | Body | 9 | Piston | 13 | Screw | 17 | E Clip |
| 2 | Spring | 6 | O-ring | 10 | Pilot body | 14 | Spring holder | 18 | Side cover |
| 3 | Bottom cover | 7 | Spool | 11 | O-ring | 15 | Return Spring | | |
| 4 | Bottom cover gasket | 8 | Wear ring | 12 | Screw | 16 | Spring holder | | |

## Dimensions

**4A110**

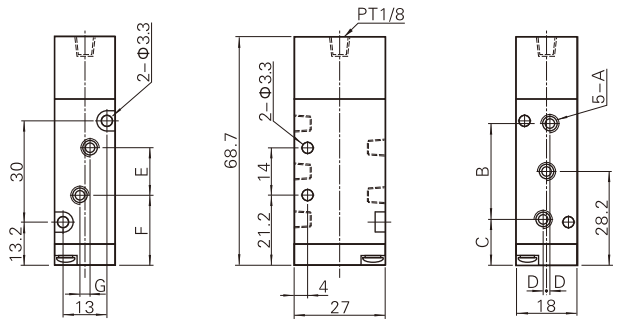


| Model\Item | A | B | C | D | E | F | G |
|---|---|---|---|---|---|---|---|
| 4A110-M5 | M5×0.8 | 27 | 14.7 | 0 | 14 | 21.2 | 0 |
| 4A110-06 | PT1/8 | 28 | 14.2 | 1 | 16 | 20.2 | 3 |

**4A120**

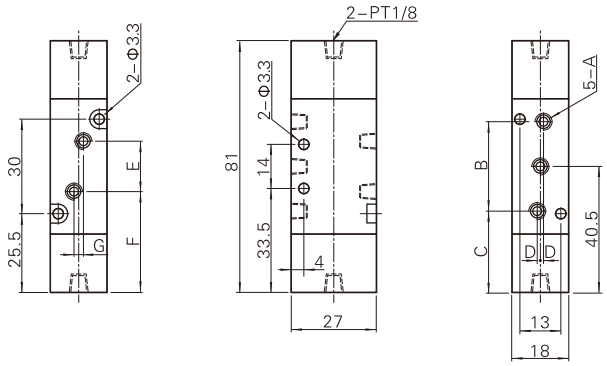


| Model\Item | A | B | C | D | E | F | G |
|---|---|---|---|---|---|---|---|
| 4A120-M5 | M5×0.8 | 27 | 27 | 0 | 14 | 33.5 | 0 |
| 4A120-06 | PT1/8 | 28 | 26.5 | 1 | 16 | 32.5 | 3 |

**4A130**

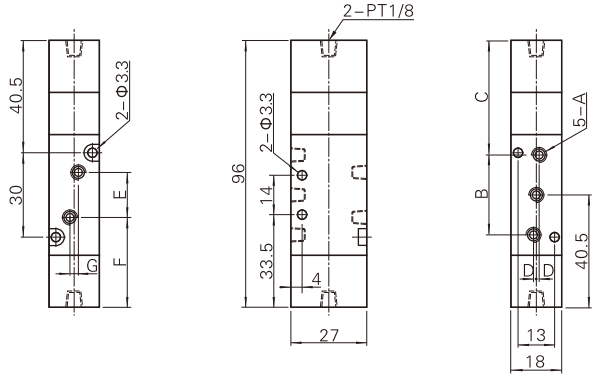


| Model\Item | A | B | C | D | E | F | G |
|---|---|---|---|---|---|---|---|
| 4A130-M5 | M5×0.8 | 27 | 42 | 0 | 14 | 33.5 | 0 |
| 4A130-06 | PT1/8 | 28 | 41.5 | 1 | 16 | 32.5 | 3 |




## Specifications

| Model | 4A210-06<br>4A220-06 | 4A230C-06<br>4A230E-06<br>4A230P-06 | 4A210-08<br>4A220-08 | 4A230C-08<br>4A230E-08<br>4A230P-08 |
|---|---|---|---|---|
| Fluid | Air(to be filtered by 40 μm filter element) | | | |
| Acting | Exterior control | | | |
| Port size ① | In=Out=Exhaust=1/8" | | In=Out=1/4" Exhaust=1/8" | |
| Orifice size | 14.0mm²(Cv=0.78) | 12.0mm²(Cv=0.67) | 16.0mm²(Cv=0.89) | 12.0mm²(Cv=0.67) |
| Valve type | 5 port 2 porsition | 5 port 3 porsition | 5 port 2 porsition | 5 port 3 porsition |
| Operating pressure | 0.15~0.8MPa(21~114psi) | | | |
| Proof pressure | 1.2MPa(175psi) | | | |
| Temperature ℃ | -20~70 | | | |
| Material of body | Aluminum alloy | | | |
| Lubrication ② | Not required | | | |
| Max. Frequency ③ | 5 cycle/sec | 3 cycle/sec | 5 cycle/sec | 3 cycle/sec |
| Weight (g) | 4A210-06:185<br>4A220-06:285 | 365 | 4A210-08:185<br>4A220-08:285 | 365 |

① PT thread, G thread and NPT thread are available.
② Once lubricated air is used, continue with same medium to optimise valve life span. lubricants like ISO VG32 or equivalent are recommended.
③ The maximum actuation frequency of no-load state.

## Symbol

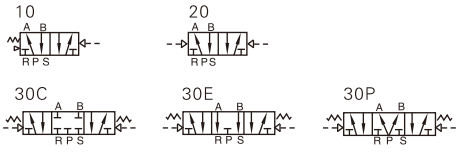


## Product feature

1. Structure in sliding column mode: good tightness and sensitive reaction.
2. Three position air valves have three kinds of central funcition for your choice.
3. Double air control valves have memory function.
4. Internal hole adopts special processing technology which has little attrition friction, low start pressure and long service life.
5. No need to add oil for lubrication.
6. Integrate with the manifold to save installation space.

## Ordering code

**4A** — **Model**

| | |
|---|---|
| 4A | Air valve (5/2, 5/3 way) |

**2** — **Code**

| | |
|---|---|
| 2 | 200 Series |

**10** — **Valve type**

| | |
|---|---|
| 10 | Single air control 5/2 way |
| 20 | Double air control 5/2 way |
| 30C | Double air control 5/3 way closed center |
| 30E | Double air control 5/3 way exhaust center |
| 30P | Double air control 5/3 way pressure center |

**08** — **Port size**

| | |
|---|---|
| 06 | 1/8" |
| 08 | 1/4" |

□ — **Thread type**

| | |
|---|---|
| Blank | PT |
| G | G |
| T | NPT |

Please refer to 64 for manifold specification and the order way.

## Flow chart

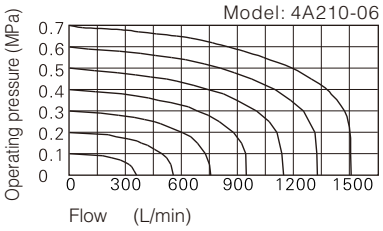


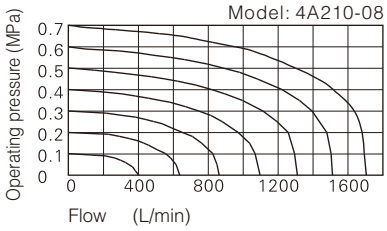

## Inner structure

**4A210**

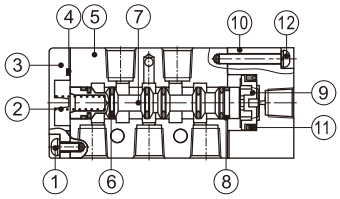


**4A220**

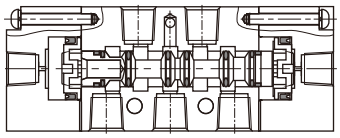

**4A230C**

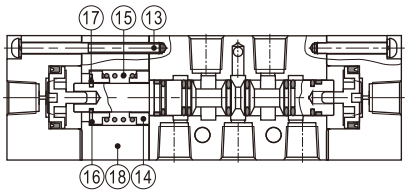


| No. | Item | No. | Item | No. | Item | No. | Item | No. | Item |
|---|---|---|---|---|---|---|---|---|---|
| 1 | Screw | 5 | Body | 9 | Piston | 13 | Screw | 17 | E Clip |
| 2 | Spring | 6 | O-ring | 10 | Pilot body | 14 | Spring holder | 18 | Side cover |
| 3 | Bottom cover | 7 | Spool | 11 | O-ring | 15 | Return Spring | | |
| 4 | Bottom cover gasket | 8 | Wear ring | 12 | Screw | 16 | Spring holder | | |

## Dimensions

**4A210**

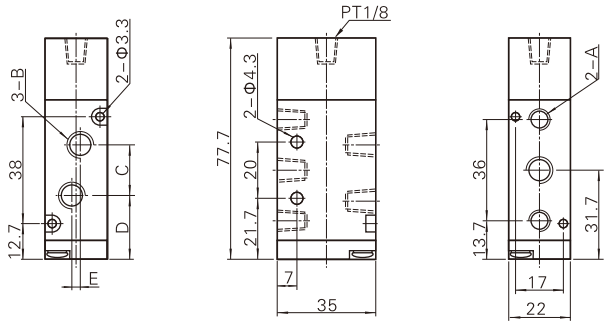


| Model\Item | A | B | C | D | E |
|---|---|---|---|---|---|
| 4A210-06 | PT1/8 | PT1/8 | 18 | 22.7 | 0 |
| 4A210-08 | PT1/8 | PT1/4 | 21 | 21.2 | 3 |

**4A220**

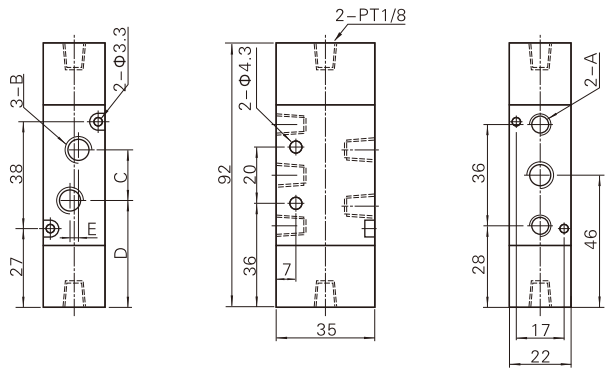


| Model\Item | A | B | C | D | E |
|---|---|---|---|---|---|
| 4A220-06 | PT1/8 | PT1/8 | 18 | 37 | 0 |
| 4A220-08 | PT1/8 | PT1/4 | 21 | 35.5 | 3 |

**4A230C**

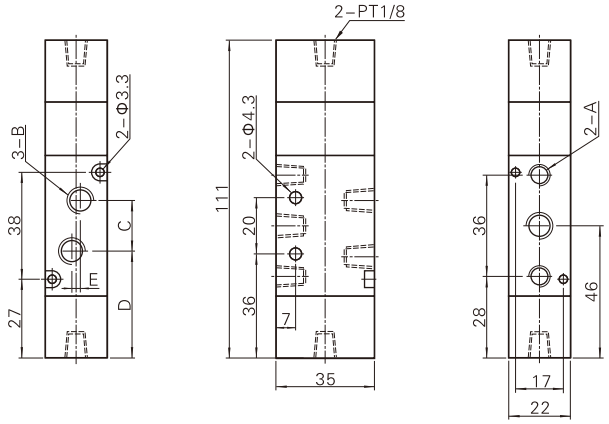


| Model\Item | A | B | C | D | E |
|---|---|---|---|---|---|
| 4A230-06 | PT1/8 | PT1/8 | 18 | 37 | 0 |
| 4A230-08 | PT1/8 | PT1/4 | 21 | 35.5 | 3 |




## Specifications

| Model | 4A310-08<br>4A320-08 | 4A330C-08<br>4A330E-08<br>4A330P-08 | 4A310-10<br>4A320-10 | 4A330C-10<br>4A330E-10<br>4A330P-10 |
|---|---|---|---|---|
| Fluid | Air(to be filtered by 40 μm filter element) | | | |
| Acting | Exterior control | | | |
| Port size ① | In=Out=Exhaust=1/8" | | In=Out=1/4" Exhaust=1/8" | |
| Orifice size | 25.0mm²(Cv=1.40) | 18.0mm²(Cv=1.00) | 30.0mm²(Cv=1.68) | 18.0mm²(Cv=1.00) |
| Valve type | 5 port 2 porsition | 5 port 3 porsition | 5 port 2 porsition | 5 port 3 porsition |
| Operating pressure | 0.15~0.8MPa(21~114psi) | | | |
| Proof pressure | 1.2MPa(175psi) | | | |
| Temperature ℃ | -20~70 | | | |
| Material of body | Aluminum alloy | | | |
| Lubrication ② | Not required | | | |
| Max. Frequency ③ | 4 cycle/sec | 3 cycle/sec | 4 cycle/sec | 3 cycle/sec |
| Weight (g) | 4A310-08:275<br>4A320-08:365 | 505 | 4A310-10:275<br>4A320-10:365 | 505 |

① PT thread, G thread and NPT thread are available.
② Once lubricated air is used, continue with same medium to optimise valve life span. lubricants like ISO VG32 or equivalent are recommended.
③ The maximum actuation frequency of no-load state.

## Symbol

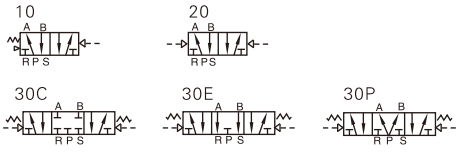


## Product feature

1. Structure in sliding column mode: good tightness and sensitive reaction.
2. Three position air valves have three kinds of central funcition for your choice.
3. Double air control valves have memory function.
4. Internal hole adopts special processing technology which has little attrition friction, low start pressure and long service life.
5. No need to add oil for lubrication.
6. Integrate with the manifold to save installation space.

## Ordering code

**4A** — **Model**

| | |
|---|---|
| 4A | Air valve (5/2, 5/3 way) |

**3** — **Code**

| | |
|---|---|
| 3 | 300 Series |

**10** — **Valve type**

| | |
|---|---|
| 10 | Single air control 5/2 way |
| 20 | Double air control 5/2 way |
| 30C | Double air control 5/3 way closed center |
| 30E | Double air control 5/3 way exhaust center |
| 30P | Double air control 5/3 way pressure center |

**10** — **Port size**

| | |
|---|---|
| 08 | 1/4" |
| 10 | 3/8" |

□ — **Thread type**

| | |
|---|---|
| Blank | PT |
| G | G |
| T | NPT |

Please refer to 64 for manifold specification and the order way.

## Flow chart

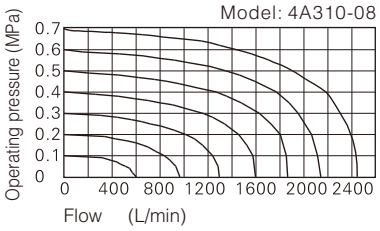


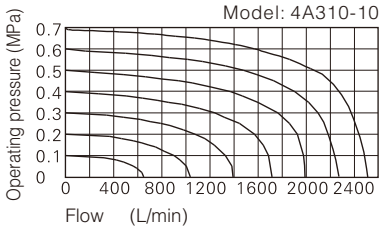

## Inner structure

**4A310**

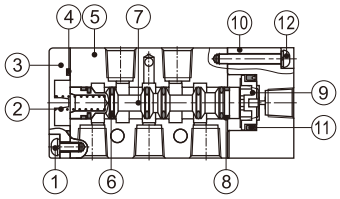


**4A320**

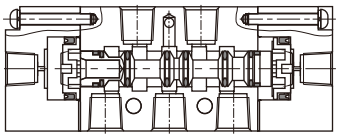

**4A330C**

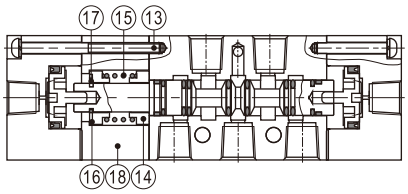


| No. | Item | No. | Item | No. | Item | No. | Item | No. | Item |
|---|---|---|---|---|---|---|---|---|---|
| 1 | Screw | 5 | Body | 9 | Piston | 13 | Screw | 17 | E Clip |
| 2 | Spring | 6 | O-ring | 10 | Pilot body | 14 | Spring holder | 18 | Side cover |
| 3 | Bottom cover | 7 | Spool | 11 | O-ring | 15 | Return Spring | | |
| 4 | Bottom cover gasket | 8 | Wear ring | 12 | Screw | 16 | Spring holder | | |

## Dimensions

**4A310**

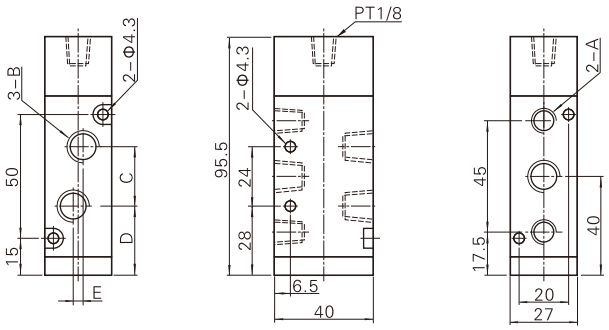


| Model\Item | A | B | C | D | E |
|---|---|---|---|---|---|
| 4A310-08 | PT1/4 | PT1/4 | 22 | 29 | 0 |
| 4A310-10 | PT1/4 | PT3/8 | 24 | 28 | 4 |

**4A320**

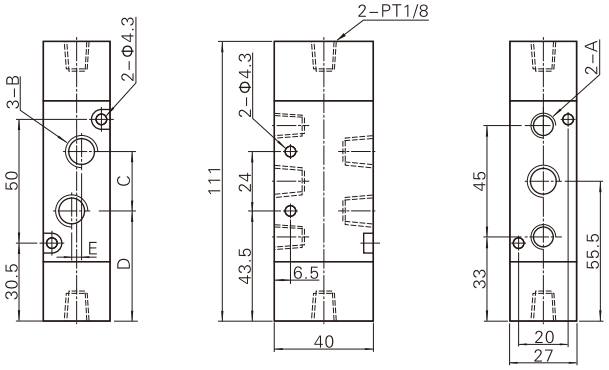


| Model\Item | A | B | C | D | E |
|---|---|---|---|---|---|
| 4A320-08 | PT1/4 | PT1/4 | 22 | 44.5 | 0 |
| 4A320-10 | PT1/4 | PT3/8 | 24 | 43.5 | 4 |

**4A330C**

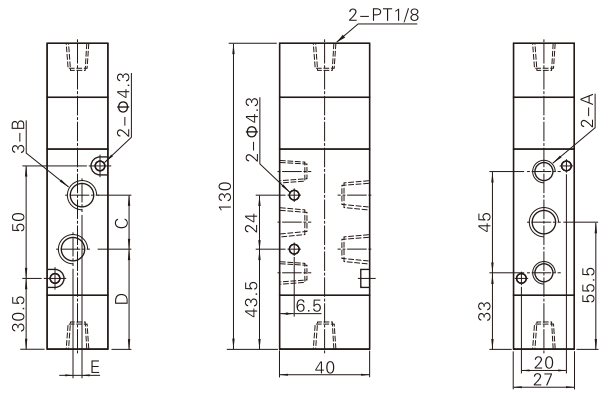


| Model\Item | A | B | C | D | E |
|---|---|---|---|---|---|
| 4A330-08 | PT1/4 | PT1/4 | 22 | 44.5 | 0 |
| 4A330-10 | PT1/4 | PT3/8 | 24 | 43.5 | 4 |




## Specifications

| Model | 4A410-15 | 4A420-15 | 4A430C-15 | 4A430E-15 | 4A430P-15 |
|---|---|---|---|---|---|
| Fluid | Air(to be filtered by 40 μm filter element) | | | | |
| Acting | Exterior control | | | | |
| Port size ① | In=Out=Exhaust=1/2" | | | | |
| Orifice size | 5.5mm²(Cv=2.79) | | 30.0mm²(Cv=1.68) | | |
| Valve type | 5 port 2 porsition | | 5 port 3 porsition | | |
| Operating pressure | 0.15~0.8MPa(21~114psi) | | | | |
| Proof pressure | 1.2MPa(175psi) | | | | |
| Temperature ℃ | -20~70 | | | | |
| Material of body | Aluminum alloy | | | | |
| Lubrication ② | Not required | | | | |
| Max. Frequency ③ | 3 cycle/sec | | | | |
| Weight (g) | 555 | 685 | 735 | | |

① PT thread, G thread and NPT thread are available.
② Once lubricated air is used, continue with same medium to optimise valve life span. lubricants like ISO VG32 or equivalent are recommended.
③ The maximum actuation frequency of no-load state.

## Symbol

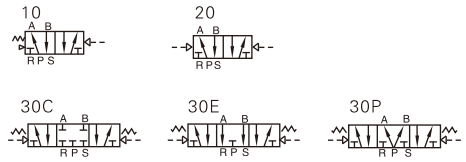


## Product feature

1. Structure in sliding column mode: good tightness and sensitive reaction.
2. Three position air valves have three kinds of central funcition for your choice.
3. Double air control valves have memory function.
4. Internal hole adopts special processing technology which has little attrition friction, low start pressure and long service life.
5. No need to add oil for lubrication.
6. Integrate with the manifold to save installation space.

## Ordering code

**4A** — **Model**

| | |
|---|---|
| 4A | Air valve (5/2, 5/3 way) |

**4** — **Code**

| | |
|---|---|
| 4 | 400 Series |

**10** — **Valve type**

| | |
|---|---|
| 10 | Single air control 5/2 way |
| 20 | Double air control 5/2 way |
| 30C | Double air control 5/3 way closed center |
| 30E | Double air control 5/3 way exhaust center |
| 30P | Double air control 5/3 way pressure center |

**15** — **Port size**

| | |
|---|---|
| 15 | 1/2" |

**□** — **Thread type**

| | |
|---|---|
| Blank | PT |
| G | G |
| T | NPT |

Please refer to 64 for manifold specification and the order way.

## Flow chart

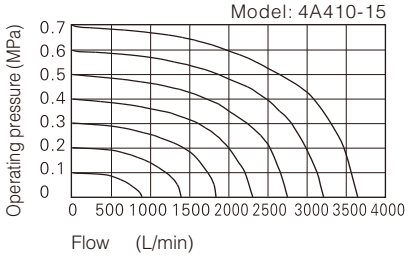

## Inner structure

**4A410**

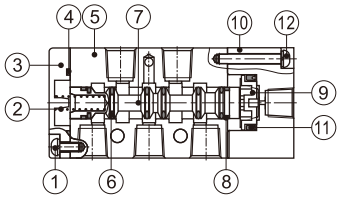


**4A420**

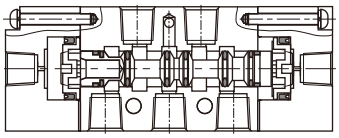

**4A430C**

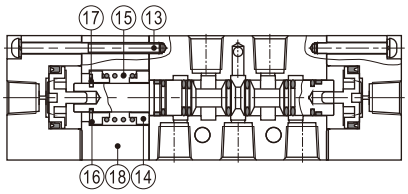


| No. | Item | No. | Item | No. | Item | No. | Item | No. | Item |
|---|---|---|---|---|---|---|---|---|---|
| 1 | Screw | 5 | Body | 9 | Piston | 13 | Screw | 17 | E Clip |
| 2 | Spring | 6 | O-ring | 10 | Pilot body | 14 | Spring holder | 18 | Side cover |
| 3 | Bottom cover | 7 | Spool | 11 | O-ring | 15 | Return Spring | | |
| 4 | Bottom cover gasket | 8 | Wear ring | 12 | Screw | 16 | Spring holder | | |

## Dimensions

**4A310**

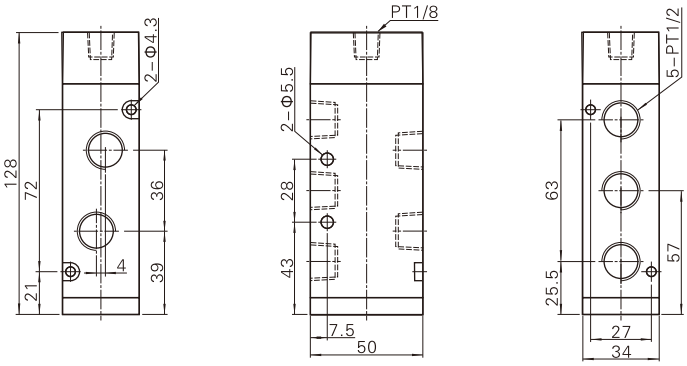


**4A420**

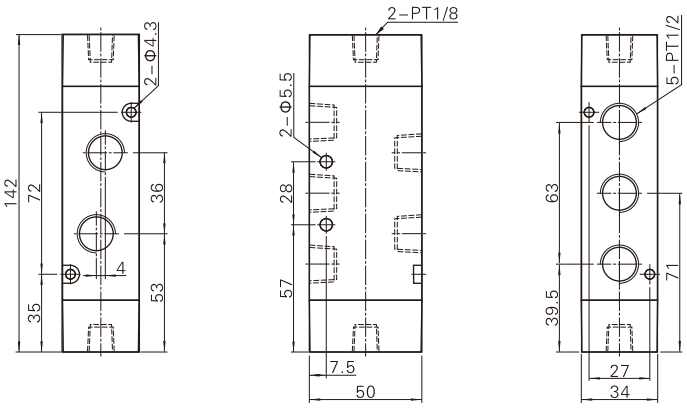


**4A430C**

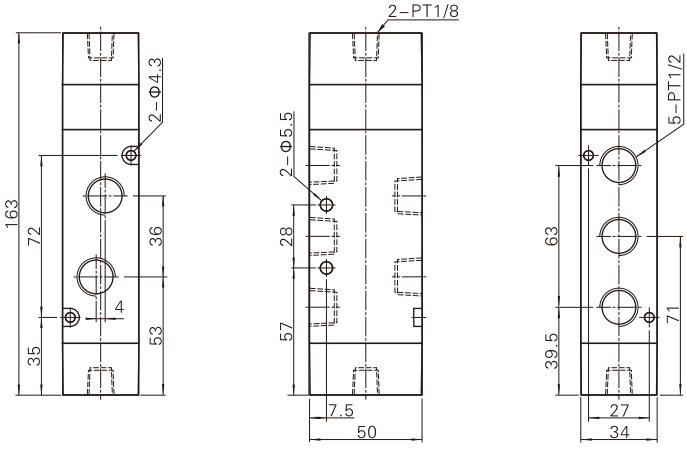

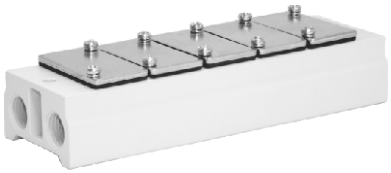

## Specifications

| Item\Manifold Model | 100M | 200M | 300M |
|---|---|---|---|
| Fluid | Air(to be filtered by 40 μm filter element) | | |
| Temperature ℃ | -20~70 | | |
| Adaotable valve's series | 3A100 Series | 3A200 Series | 3A300 Series |

## Product feature

1. It is available to integrate the direction control valves of the same series to form valve group to save space and cost;
2. It is easy to examine when there are faults owning to the unified air intake and exhaust and unified wiring;
3. Flexible combination and strong expansion capability can make any combination or expansion of the numbers of direction control valves that are connected.

## Ordering code

Ordering code contains the two parts of the manifold's and the blank plate's.

### Ordering code for manifold

**3A100M** — **Model**

| | |
|---|---|
| 3A100M | 100 Series Manifold |
| 3A200M | 200 Series Manifold |
| 3A300M | 300 Series Manifold |

**5F** — **Number of stations**

| | |
|---|---|
| 1F | 1 Station |
| 2F | 2 Station |
| ... | ... |
| 16 | 16 Station |

□ — **Thread type**

| | |
|---|---|
| Blank | PT |
| G | G |
| T | NPT |

### Ordering code for blank plate

**P** — **Component code**

| | |
|---|---|
| P | Component |

**3A100M** — **Model**

| | |
|---|---|
| 3A100M | 100 Series Manifold |
| 3A200M | 200 Series Manifold |
| 3A300M | 300 Series Manifold |

**R2** — **Code**

| | |
|---|---|
| R2 | Blank plate for manifold |

Remark: 1. Manifold kits contains manifold, seal and screw.
2. Blank plate kits contains blank plate, and screw.

## Dimensions

**Wiht 3A air valve**

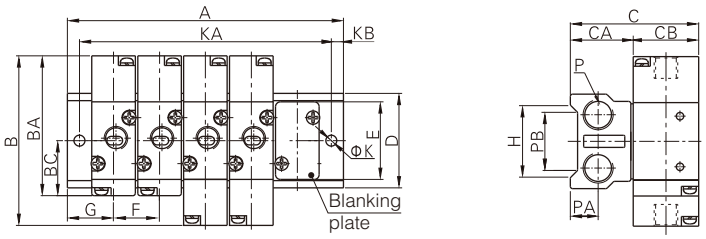


| Model\Item | B | BA | BC | C | CA | CB | D | E | F | G | H | K | KB | P | PA | PB |
|---|---|---|---|---|---|---|---|---|---|---|---|---|---|---|---|---|
| 3A100M | 70 | 57.7 | 22.7 | 53 | 26 | 27 | 39 | 32 | 19 | 19 | 30 | 4.5 | 5 | PT1/4 | 11.5 | 22 |
| 3A200M | 84 | 69.7 | 27.7 | 61 | 26 | 35 | 45 | 40 | 23 | 23 | 35 | 4.5 | 6 | PT1/4 | 11.5 | 25 |
| 3A300M | 96 | 80.5 | 32.5 | 70 | 30 | 40 | 52 | 47 | 28 | 27 | 42 | 4.5 | 6 | PT3/8 | 13.5 | 28 |

| Model\Item | A | | | | | | | | | | | | | | | |
|---|---|---|---|---|---|---|---|---|---|---|---|---|---|---|---|---|
| | 1F | 2F | 3F | 4F | 5F | 6F | 7F | 8F | 9F | 10F | 11F | 12F | 13F | 14F | 15F | 16F |
| 3A100M | 38 | 57 | 76 | 95 | 114 | 133 | 152 | 171 | 190 | 209 | 228 | 247 | 266 | 285 | 304 | 323 |
| 3A200M | 46 | 69 | 92 | 115 | 138 | 161 | 184 | 207 | 230 | 253 | 276 | 299 | 322 | 345 | 368 | 391 |
| 3A300M | 54 | 82 | 110 | 138 | 166 | 194 | 222 | 250 | 278 | 306 | 334 | 362 | 390 | 418 | 446 | 474 |

| Model\Item | KA | | | | | | | | | | | | | | | |
|---|---|---|---|---|---|---|---|---|---|---|---|---|---|---|---|---|
| | 1F | 2F | 3F | 4F | 5F | 6F | 7F | 8F | 9F | 10F | 11F | 12F | 13F | 14F | 15F | 16F |
| 3A100M | 28 | 47 | 66 | 85 | 104 | 123 | 142 | 161 | 180 | 199 | 218 | 237 | 256 | 275 | 294 | 313 |
| 3A200M | 34 | 57 | 80 | 103 | 126 | 149 | 172 | 195 | 218 | 241 | 264 | 287 | 310 | 333 | 356 | 379 |
| 3A300M | 42 | 70 | 98 | 126 | 154 | 182 | 210 | 238 | 266 | 294 | 322 | 350 | 378 | 406 | 434 | 462 |



## Specifications

| Item\Manifold Model | 100M | 200M | 300M | 400M |
|---|---|---|---|---|
| Fluid | Air(to be filtered by 40 μm filter element) | | | |
| Temperature ℃ | -20~70 | | | |
| Adaotable valve's series | 4A100 Series | 4A200 Series | 4A300 Series | 4A400 Series |

## Product feature

1. It is available to integrate the direction control valves of the same series to form valve group to save space and cost;
2. It is easy to examine when there are faults owning to the unified air intake and exhaust and unified wiring;
3. Flexible combination and strong expansion capability can make any combination or expansion of the numbers of direction control valves that are connected.

## Ordering code

Ordering code contains the two parts of the manifold's and the blank plate's.

### Ordering code for manifold

**100M** — **Model**

| | |
|---|---|
| 100M | 100 Series Manifold |
| 200M | 200 Series Manifold |
| 300M | 300 Series Manifold |
| 400M | 400 Series Manifold |

**5F** — **Number of stations**

| | |
|---|---|
| 1F | 1 Station |
| 2F | 2 Station |
| ... | ... |
| 16 | 16 Station |

□ — **Thread type**

| | |
|---|---|
| Blank | PT |
| G | G |
| T | NPT |

### Ordering code for blank plate

**P** — **Component code**

| | |
|---|---|
| P | Component |

**100M** — **Model**

| | |
|---|---|
| 100M | 100 Series Manifold |
| 200M | 200 Series Manifold |
| 300M | 300 Series Manifold |
| 400M | 400 Series Manifold |

**R2** — **Code**

| | |
|---|---|
| R2 | Blank plate for manifold |

① 100M,200M series have a maximum of 16 stations; 300M series have a maximum of 12 stations; 400M series have a maximum of 8 stations.

## Dimensions

**Wiht 4A air valve**

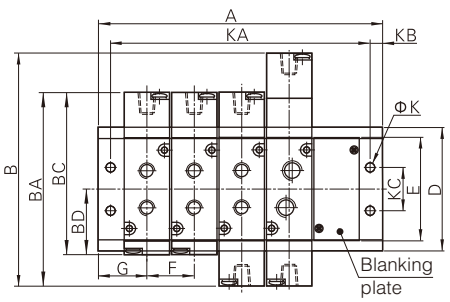


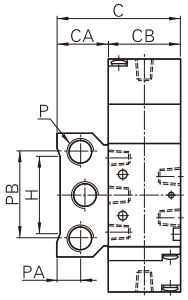


| Model\Item | B | BA | BC | BD | C | CA | CB | D | E | F | G | H | K | KB | KC | P | PA | PB |
|---|---|---|---|---|---|---|---|---|---|---|---|---|---|---|---|---|---|---|
| 100M□F | 96 | 81 | 68.7 | 28 | 53 | 26 | 27 | 58 | 43 | 19 | 19 | 36 | 4.5 | 5 | 20 | PT1/4 | 12.5 | 40 |
| 200M□F | 111 | 92 | 77.7 | 31.7 | 62 | 27 | 35 | 61 | 51 | 23 | 23 | 38 | 4.5 | 6 | 21 | PT1/4 | 13 | 43 |
| 300M□F | 130 | 111 | 95.5 | 40 | 71 | 31 | 40 | 75 | 65 | 28 | 27 | 54 | 4.5 | 6 | 26 | PT3/8 | 15 | 53 |
| 400M□F | 163 | 142 | 128 | 57 | 89 | 39 | 50 | 104 | 94.5 | 35 | 31.5 | 75 | 5.5 | 7 | 32 | PT1/2 | 19 | 68 |

| Model\Item | A | | | | | | | | | | | | | | | |
|---|---|---|---|---|---|---|---|---|---|---|---|---|---|---|---|---|
| | 1F | 2F | 3F | 4F | 5F | 6F | 7F | 8F | 9F | 10F | 11F | 12F | 13F | 14F | 15F | 16F |
| 100M□F | 38 | 57 | 76 | 95 | 114 | 133 | 152 | 171 | 190 | 209 | 228 | 247 | 266 | 285 | 304 | 323 |
| 200M□F | 46 | 69 | 92 | 115 | 138 | 161 | 184 | 207 | 230 | 253 | 276 | 299 | 322 | 345 | 368 | 391 |
| 300M□F | 54 | 82 | 110 | 138 | 166 | 194 | 222 | 250 | 278 | 306 | 334 | 362 | - | - | - | - |
| 400M□F | 63 | 98 | 133 | 168 | 203 | 238 | 273 | 308 | - | - | - | - | - | - | - | - |

| Model\Item | KA | | | | | | | | | | | | | | | |
|---|---|---|---|---|---|---|---|---|---|---|---|---|---|---|---|---|
| | 1F | 2F | 3F | 4F | 5F | 6F | 7F | 8F | 9F | 10F | 11F | 12F | 13F | 14F | 15F | 16F |
| 100M□F | 28 | 47 | 66 | 85 | 104 | 123 | 142 | 161 | 180 | 199 | 218 | 237 | 256 | 275 | 294 | 313 |
| 200M□F | 34 | 57 | 80 | 103 | 126 | 149 | 172 | 195 | 218 | 241 | 264 | 287 | 310 | 333 | 356 | 379 |
| 300M□F | 42 | 70 | 98 | 126 | 154 | 182 | 210 | 238 | 266 | 294 | 322 | 350 | - | - | - | - |
| 400M□F | 49 | 84 | 119 | 154 | 189 | 224 | 259 | 294 | - | - | - | - | - | - | - | - |

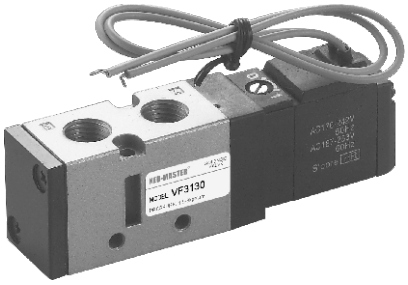

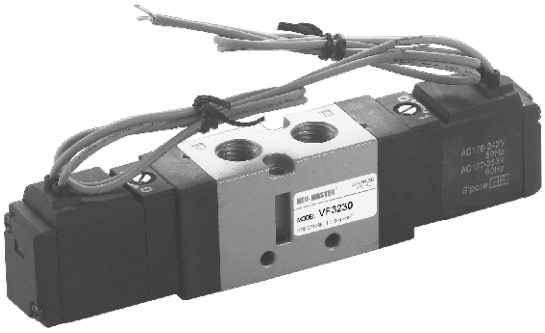

## Symbol




## Ordering code

**VF3**
**DS3**

**Model**

| | |
|---|---|
| VF3 | 5/2, 5/3 way Solenoid valve |

**130**

**Valve type**

| | |
|---|---|
| 130 | Single air control 5/2 way |
| 230 | Double air control 5/2 way |
| 330 | Double air control 5/3 way closed center |
| 430 | Double air control 5/3 way exhaust center |
| 530 | Double air control 5/3 way pressure center |

**4**

**Voltage**

| | |
|---|---|
| 3 | 110VAC |
| 4 | 220VAC |
| 5 | 24VDC |
| 6 | 12VDC |

**G**

**Conductor form**

| | |
|---|---|
| G | Direct grommet |
| D | Terminal |
| DZ | Terminal with lamp |

**B**

**Manual operation**

**02**

**Port size**

| | |
|---|---|
| 02 | 1/4" |

## Common specifications

| Fluid | Air |
|---|---|
| Environment and fluid temperature | high 50℃ |
| lubrication | Not required |
| Manual operation | Screwdriver lock type |
| Shock / vibration resistance | 30G/5G(8.3~2000Hz) |
| Seal up | Dust prevention |

## Electromagnetic coil specifications

| Connection mode | | Direct grommet(G), Terminal(D) |
|---|---|---|
| Standard voltage | | AC: 110V, 220V(50Hz) DC: 12V, 24V |
| Allowable voltage variation range | | Rated voltage: -15%~+10% |
| Insulation overvoltage | | B class or same class |
| Power consumption | AC | start-up: 5.6VA, Continued 3.4VA |
| | DC | 1.8W/2W(With indicator light) |
| Surge suppressor | | AC: Varistor, DC: Diode |
| Indicator light | | AC: Neon lamp, DC: light-emitting diode |

## Model explain

| Model | Specifications | | | | | | | |
|---|---|---|---|---|---|---|---|---|
| | Location number | Electromagnetic coil | Operating pressure range kgf/cm²(Mpa) | Response time (milliseconds) | Maximum operating frequency (Times per second) | Port size | Orifice size mm²(CV Value) | Weight (Kgf) |
| VF3130-□△B-02 | 2 | Single coil | 1.5~9(0.15~0.9) | 30 or below | 5 | 1/4 | 17.1(0.95) | 0.21 |
| VF3230-□△B-02 | 2 | Double coil | 1~9(0.1~0.9) | 30 or below | 5 | 1/4 | 17.1(0.95) | 0.29 |
| VF3330-□△B-02 | 3 | Double(closed center) | 1~9(0.1~0.9) | 50 or below | 3 | 1/4 | 13.5(0.75) | 0.42 |
| VF3430-□△B-02 | 3 | Double(exhaust center) | 1~9(0.1~0.9) | 50 or below | 3 | 1/4 | 17.1(0.95) | 0.42 |
| VF3530-□△B-02 | 3 | Double(pressure center) | 1~9(0.1~0.9) | 50 or below | 3 | 1/4 | 16.2(0.9) | 0.42 |

## Dimensions

### 3130(Grommet)

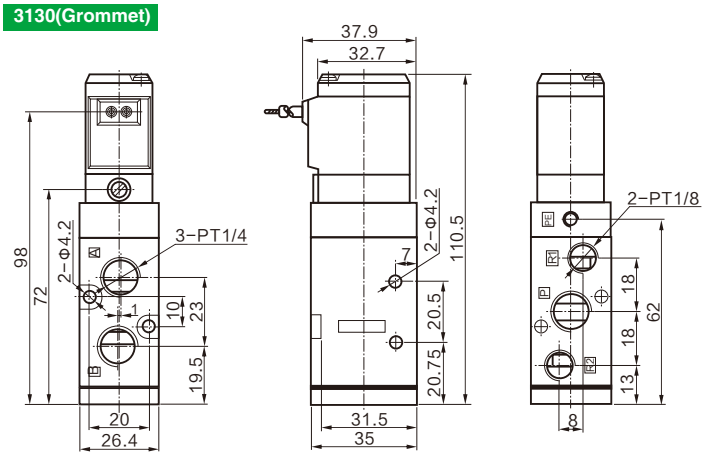


### 3130(Terminal)

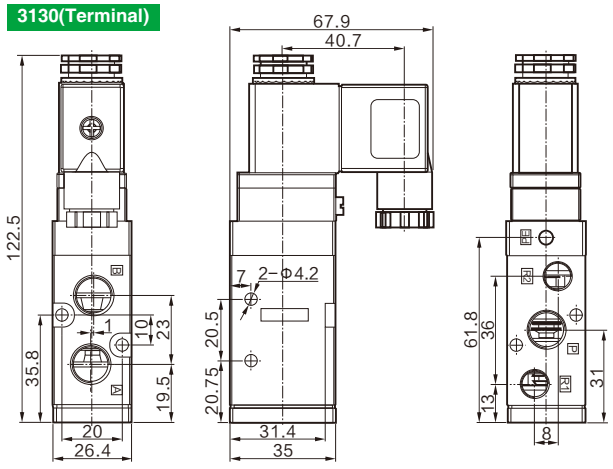


### 3230(Grommet)

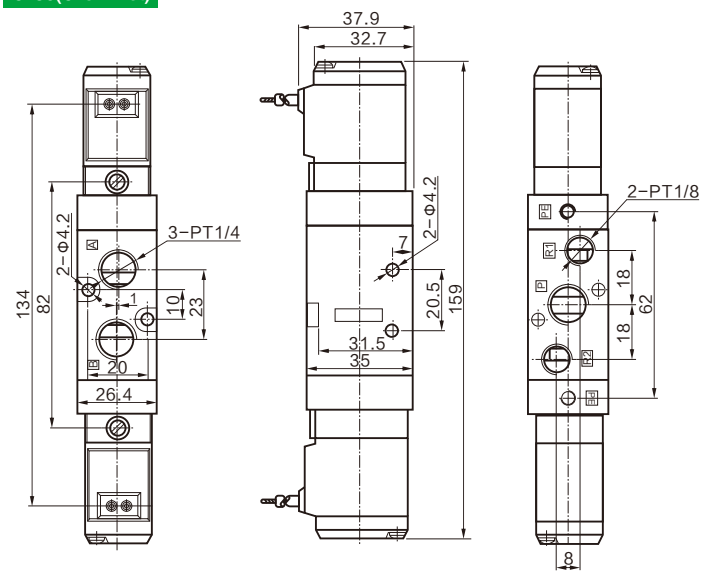


### 3230(Terminal)

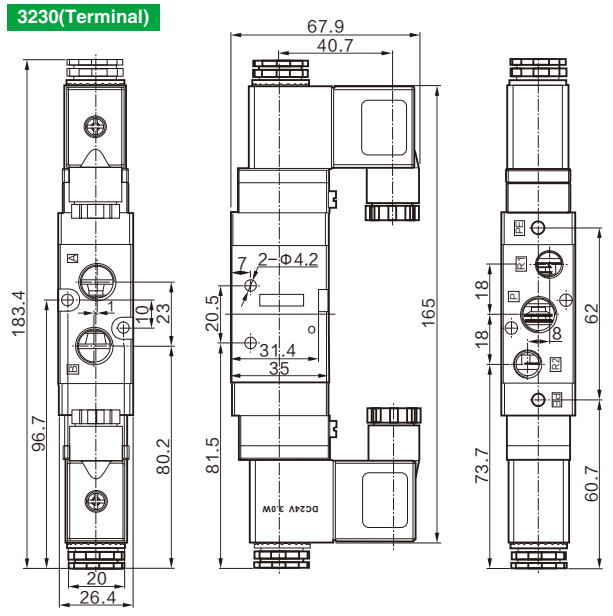


### 3330\3430\3530(Grommet)

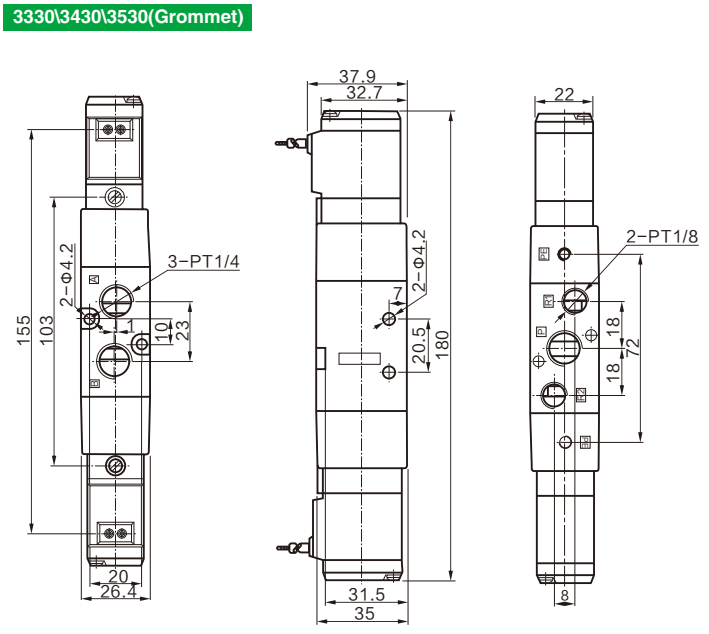


### 3330\3430\3530(Terminal)

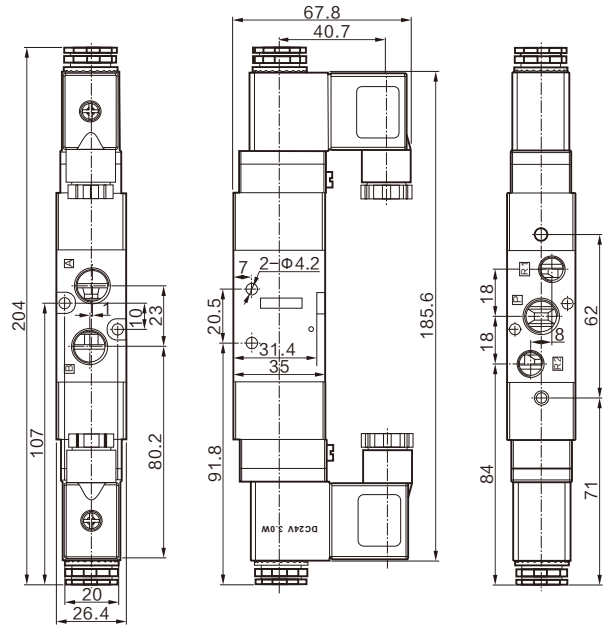

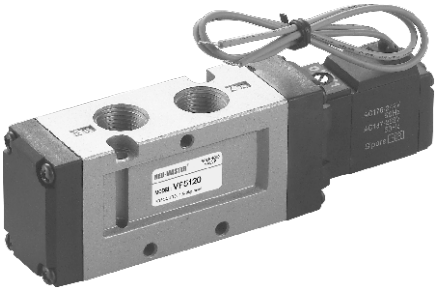

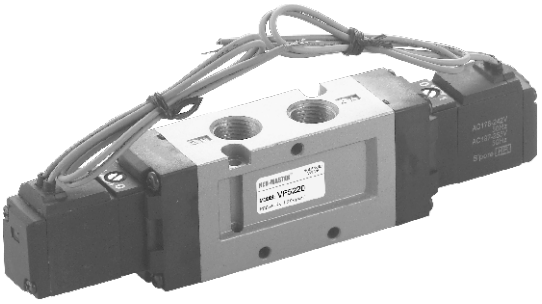

## Symbol




## Ordering code

**VF5**
**DS5**

**Model**

| | |
|---|---|
| VF5 | 5/2, 5/3 way Solenoid valve |

**120**

**Valve type**

| | |
|---|---|
| 120 | Single air control 5/2 way |
| 220 | Double air control 5/2 way |
| 320 | Double air control 5/3 way closed center |
| 420 | Double air control 5/3 way exhaust center |
| 520 | Double air control 5/3 way pressure center |

**4**

**Voltage**

| | |
|---|---|
| 3 | 110VAC |
| 4 | 220VAC |
| 5 | 24VDC |
| 6 | 12VDC |

**G**

**Conductor form**

| | |
|---|---|
| G | Direct grommet |
| D | Terminal |
| DZ | Terminal with lamp |

**B**

**Manual operation**

**03**

**Port size**

| | |
|---|---|
| 03 | 3/8" |

## Common specifications

| Fluid | Air |
|---|---|
| Environment and fluid temperature | high 50℃ |
| lubrication | Not required |
| Manual operation | Screwdriver lock type |
| Shock / vibration resistance | 30G/5G(8.3~2000Hz) |
| Seal up | Dust prevention |

## Electromagnetic coil specifications

| Connection mode | | Direct grommet(G), Terminal(D) |
|---|---|---|
| Standard voltage | | AC: 110V, 220V(50Hz) DC: 12V, 24V |
| Allowable voltage variation range | | Rated voltage: -15%~+10% |
| Insulation overvoltage | | B class or same class |
| Power consumption | AC | start-up: 5.6VA, Continued 3.4VA |
| | DC | 1.8W/2W(With indicator light) |
| Surge suppressor | | AC: Varistor, DC: Diode |
| Indicator light | | AC: Neon lamp, DC: light-emitting diode |

## Model explain

| Model | Specifications | | | | | | | |
|---|---|---|---|---|---|---|---|---|
| | Location number | Electromagnetic coil | Operating pressure range kgf/cm²(Mpa) | Response time (milliseconds) | Maximum operating frequency (Times per second) | Port size | Orifice size mm²(CV Value) | Weight (Kgf) |
| VF5120-□△B-02 | 2 | Single coil | 1.5~9(0.15~0.8) | 30 or below | 5 | 3/8 | 45(2.5) | 0.38 |
| VF5220-□△B-02 | 2 | Double coil | 1~9(0.1~0.9) | 30 or below | 5 | 3/8 | 45(2.5) | 0.45 |
| VF5320-□△B-02 | 3 | Double(closed center) | 1~9(0.1~0.9) | 50 or below | 3 | 3/8 | 36(2) | 0.53 |
| VF5420-□△B-02 | 3 | Double(exhaust center) | 1~9(0.1~0.9) | 50 or below | 3 | 3/8 | 41.4(2.3) | 0.53 |
| VF5520-□△B-02 | 3 | Double(pressure center) | 1~9(0.1~0.9) | 50 or below | 3 | 3/8 | 36(2) | 0.53 |

## Dimensions

### 5120(Grommet)

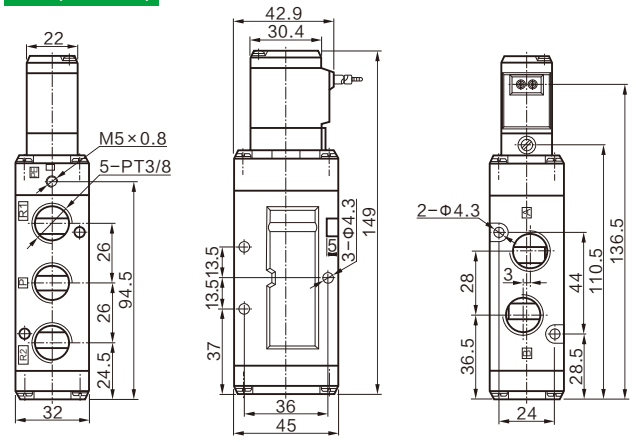


### 5120(Terminal)

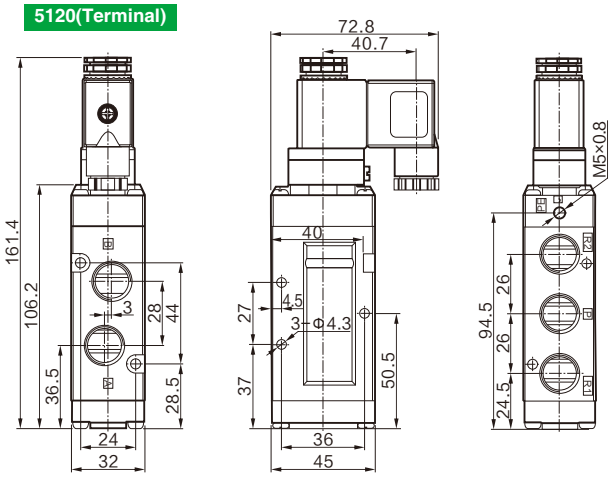


### 5220(Grommet)

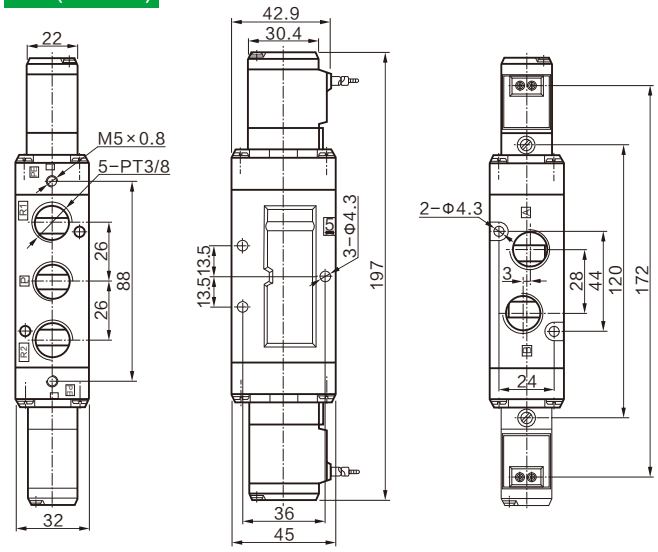


### 5220(Terminal)

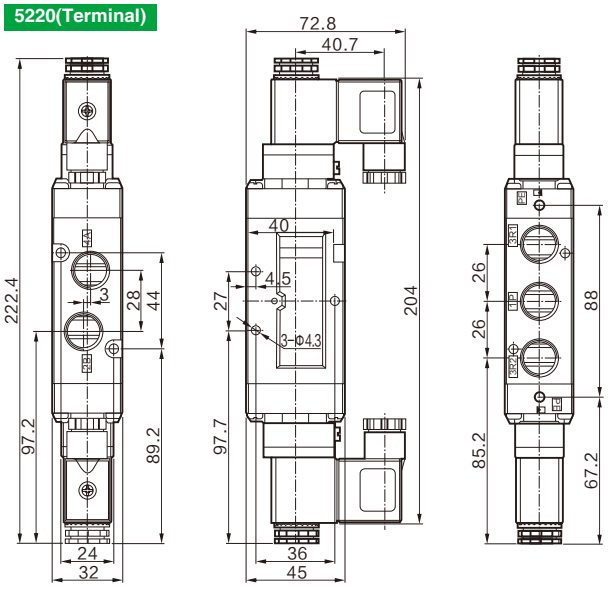


### 5320\5420\5520(Grommet)

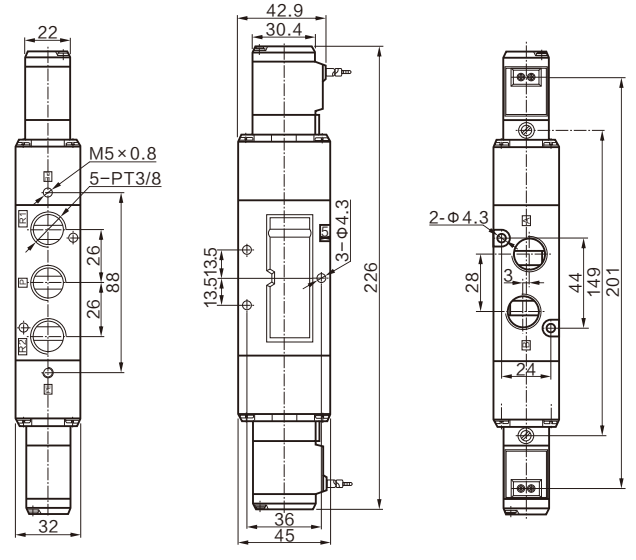


### 5320\5420\5520(Terminal)

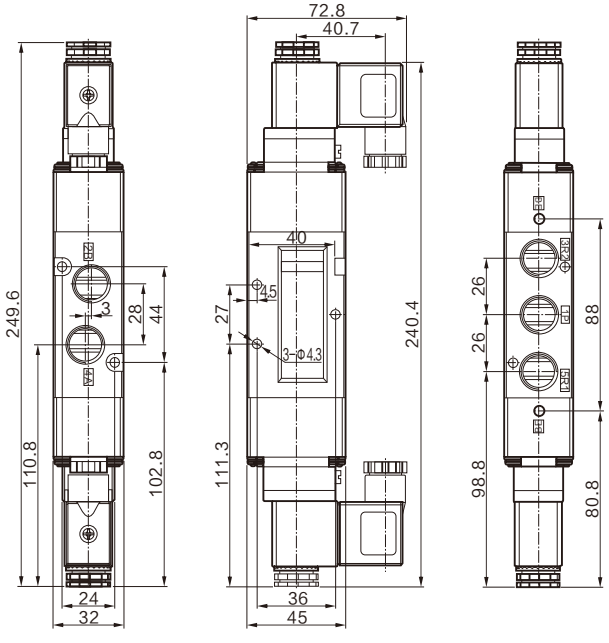




## Specifications

| Series | | SY3000 | SY5000 | SY7000 | SY9000 |
|---|---|---|---|---|---|
| Fluid | | Air | | | |
| Internal pilot Operating pressure range (Mpa) | 2 position single | 0.15~0.7 | | | |
| | 2 position double | 0.1~0.7 | | | |
| | 3 position | 0.2~0.7 | | | |
| Ambient and fluid temperature (°C) | | -10 to 50 (No freezing) | | | |
| Max. operating frequency (Hz) | 2 position single, double | 10Hz | 5Hz | 5Hz | 5Hz |
| | 3 position | 3Hz | 3Hz | 3Hz | 3Hz |
| Manual override (Manual operation) | | Bolt driver pressure lock type | | | |
| Pilot exhaust method | | Common exhaust type for main and pilot valve | | | |
| Lubrication | | Not required | | | |
| Mounting orientation | | Unrestricted | | | |
| Impact/Vibration resistance (m/s²) | | 150/30 | | | |
| Enclosure | | Dust proof | | | |

## Symbol

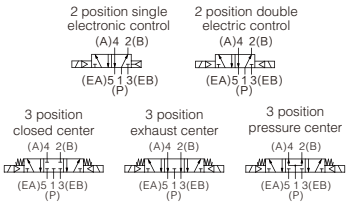


| Series | Tripod type | Side bracket |
|---|---|---|
| SY3000 | SX3000-16-2A | SX3000-16-1A |
| SY5000 | SX5000-16-2A | SX5000-16-1A |
| SY7000 | SX7000-16-2A | SX7000-16-1A |

Foot seat type bracket

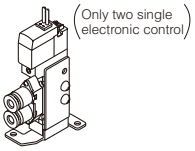


Side bracket

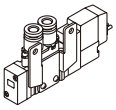

*SY9000 No bracket.

## Solenoid Specifications

| Electrical entry | | | Grommet (G) L plug terminal (L) |
|---|---|---|---|
| Coil rated voltage (V) | DC | | 24, 12 |
| | AC50/60Hz | | 110, 220 |
| Allowable voltage fluctuation | | | ±10% |
| Power consumption (W) | DC | Standard | 0.35 (With indicator light: 0.4 DIN terminal with indicator light: 0.45) |
| | | With power saving circuit | 0.1(With indicator light) |
| Apparent power (VA)* | AC | 110V [115V] | 0.86 (With indicator light: 0.89) [0.94 (With indicator light: 0.97)] |
| | | 220V [230V] | 1.30 (With indicator light: 1.34) [1.42 (With indicator light: 1.46)] |
| Surge voltage suppressor | | | Diode (Varistor is for DIN terminal and Non-polar type.) |
| Indicator light | | | LED (AC of DIN connector is neon light.) |

* AC110V and 115V, AC220V and 230V Share.

| Model Note | Specifications | | | | |
|---|---|---|---|---|---|
| | Functional digit | Response time(ms) | Effective sectional area mm²(Cv) | Pipe size Rc(PT) | Weight(g) Terminal |
| 5Y3120-□△D-◇ | 2 position single electronic control | 12 or less | 2.88(0.16) | * M5x0.8 C4 C6 | 51 |
| 5Y3220-□△D-◇ | 2 position double electric control | 10 or less | 2.88(0.16) | | 68 |
| 5Y3320-□△D-◇ | 3 position closed center | 15 or less | 2.34(0.13) | | 71 |
| 5Y3420-□△D-◇ | 3 position exhaust center | 15 or less | 2.34(0.13) | | 71 |
| 5Y3520-□△D-◇ | 3 position pressure center | 15 or less | 2.7(0.15) | | 71 |
| 5Y5120-□△D-◇ | 2 position single electronic control | 19 or less | 8.82(0.49) | * 1/8 C4 C6 C8 | 70 |
| 5Y5220-□△D-◇ | 2 position double electric control | 18 or less | 8.82(0.49) | | 88 |
| 5Y5320-□△D-◇ | 3 position closed center | 32 or less | 8.1(0.45) | | 93 |
| 5Y5420-□△D-◇ | 3 position exhaust center | 32 or less | 7.38(0.41) | | 93 |
| 5Y5520-□△D-◇ | 3 position pressure center | 32 or less | 10.98(0.61) | | 93 |
| 5Y7120-□△D-◇ | 2 position single electronic control | 31 or less | 16.74(0.93) | * 1/4 C8 C10 | 101 |
| 5Y7220-□△D-◇ | 2 position double electric control | 27 or less | 16.74(0.93) | | 120 |
| 5Y7320-□△D-◇ | 3 position closed center | 50 or less | 12.6(0.7) | | 128 |
| 5Y7420-□△D-◇ | 3 position exhaust center | 50 or less | 11.7(0.65) | | 128 |
| 5Y7520-□△D-◇ | 3 position pressure center | 50 or less | 17.46(0.97) | | 128 |
| 5Y9120-□△D-◇ | 2 position single electronic control | 35 or less | 34.2(1.9) | * 3/8 C8 C10 C12 | 236 |
| 5Y9220-□△D-◇ | 2 position double electric control | 35 or less | 34.2(1.9) | | 255 |
| 5Y9320-□△D-◇ | 3 position closed center | 62 or less | 34.2(1.9) | | 279 |
| 5Y9420-□△D-◇ | 3 position exhaust center | 62 or less | 34.2(1.9) | | 279 |
| 5Y9520-□△D-◇ | 3 position pressure center | 62 or less | 39.6(2.2) | | 279 |

Note) □-Representative voltage
3=110VAC
4=220VAC
5=24VDC
6=12VDC

△-Representative wiring mode
G=Grommet(Line length 300mm)
L=terminal(Line length 300mm)
LZ=terminal(Line length 300mm, With indicator light and over voltage protection circuit)
D=Grommet

◇-Representative pipe size
M5=M5×0.8 Thread(SY3000 Use)
01=Rc1/8 Thread(SY5000 Use)
02=Rc1/4 Thread(SY7000 Use)
03=Rc3/8 Thread(SY9000 Use)
C4=Φ4mm Quick change joint(SY3000·5000 Use)
C6=Φ6mm Quick change joint(SY3000·5000 Use)
C8=Φ8mm Quick change joint(SY5000·7000·9000 Use)
C10=Φ10mm Quick change joint(SY7000·9000 Use)
C12=Φ12mm Quick change joint(SY9000 Use)

*Corresponding aperture CV value

Ordering example:
1)Ordering 5/2 way solenoid valve single electric control type, Voltage: 24VDC, Grommet, pipe size: M5, With tripod
Correct model: SY3120-5GD-M5 1pcs
SX3000-16-2A 1pcs
2)Ordering 5/3 way solenoid valve exhaust center type, Voltage: 220VAC, terminal, pipe size: Rc3/8, With indicator light and over voltage protection circuit
Correct model: SY9320-4LZD-03

## Dimensions

### 2 position single electronic control

Direct Grommet(G)
SY3120-□G□□-$^{C4}_{C6}$

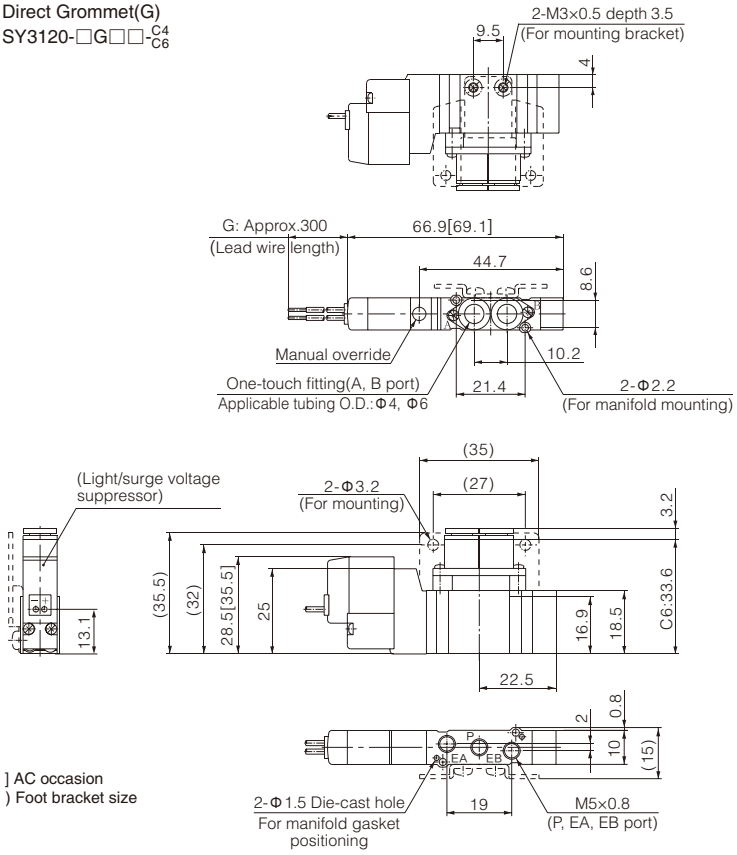


[ ] AC occasion
( ) Foot bracket size

### Foot bracket

SY3120-□G□□-$^{C4}_{C6}$

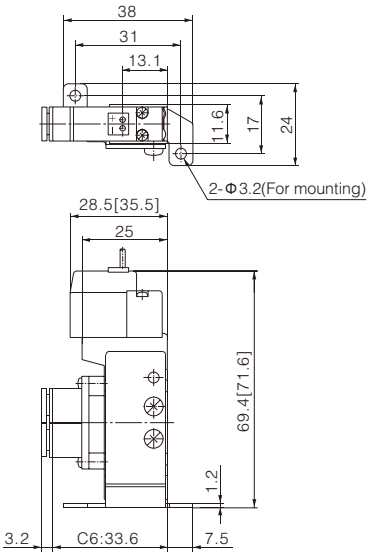


SY3120-□G□□-M5

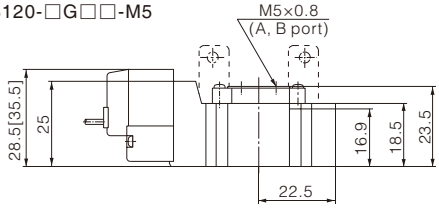


### Double electric control

(SY3220.SY3320.SY3420.SY3520)
Direct Grommet(G)
SY3*20-□GD-C4/C6

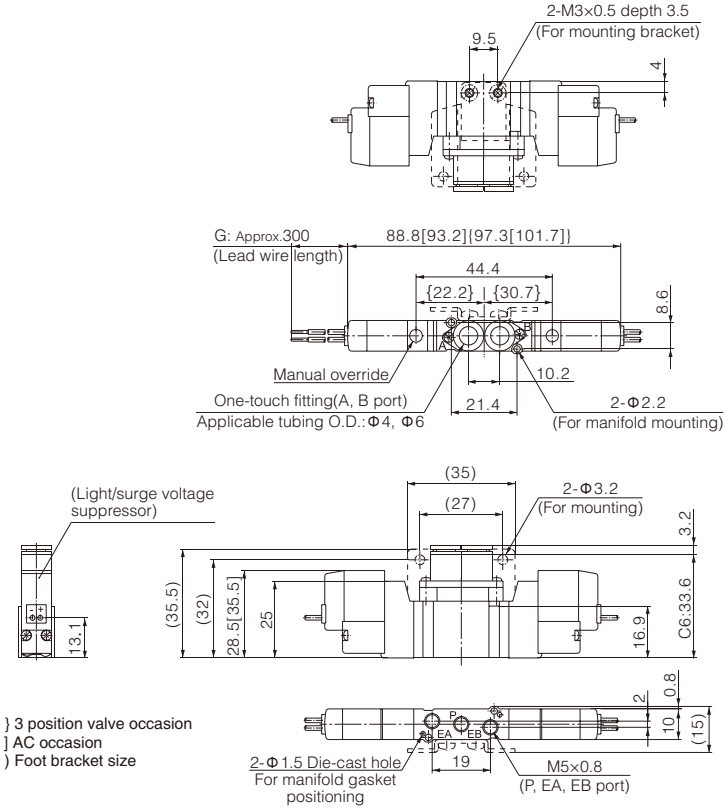


{ } 3 position valve occasion
[ ] AC occasion
( ) Foot bracket size

### 2 position single electronic control

L Terminal
SY3120-□L□□-$^{C4}_{C6}$

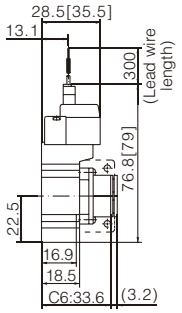


DIN Terminal
SY3120-□D□□-$^{C4}_{C6}$

DIN terminal SY3000 series not suitable containerized type

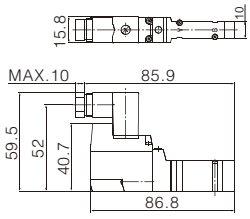


<DIN terminal Model>

| No lights | SY100-61-1 |
|---|---|

With light

| Rated voltage | DIN Plug |
|---|---|
| 24 VDC | SY100-61-3-05 |
| 12 VDC | SY100-61-3-06 |
| 110 VAC | SY100-61-2-03 |
| 220 VAC | SY100-61-2-04 |

L terminal
SY$^{2}_{3}_{5}$20-□LD-C4/C6

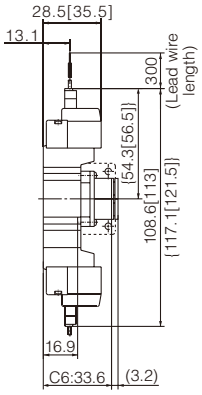

## Dimensions

### 2 position single electronic control

Direct Grommet(G)

SY5120-□G□□-C4/C6/C8

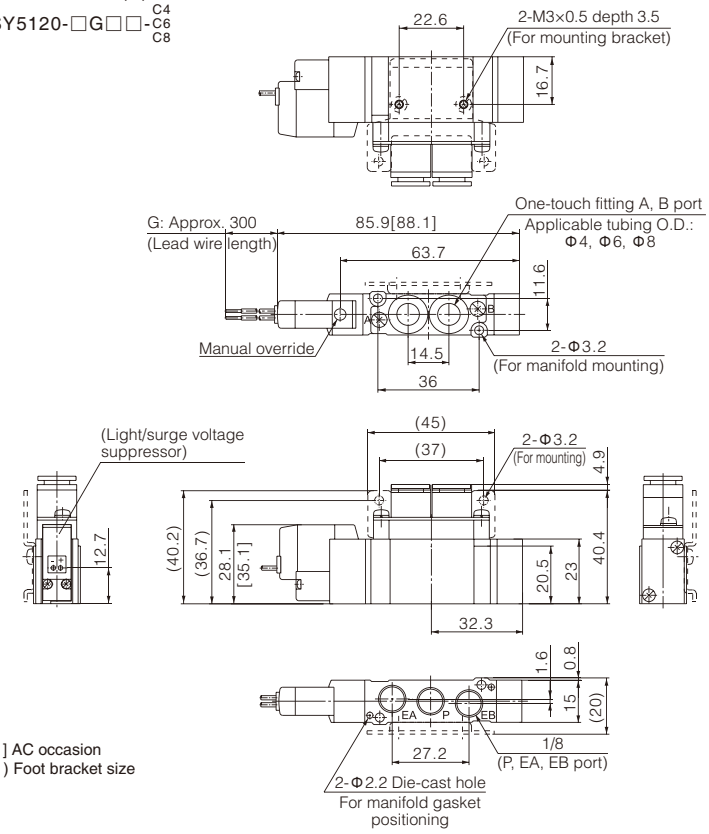


[ ] AC occasion
( ) Foot bracket size

### Foot bracket

SY5120-□G□□-C4/C6/C8

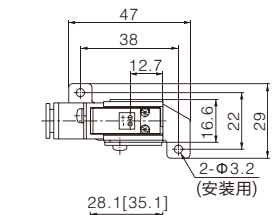


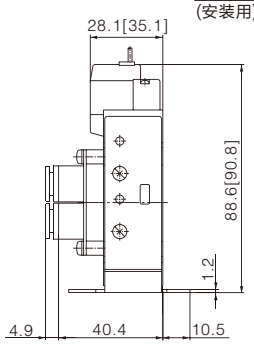


SY5120-□G□□-01

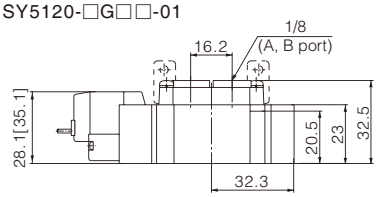


### Double electric control

(SY5220.SY5320.SY5420.SY5520)
Direct Grommet(G)
SY5*20-□GD-C4/C6/C8

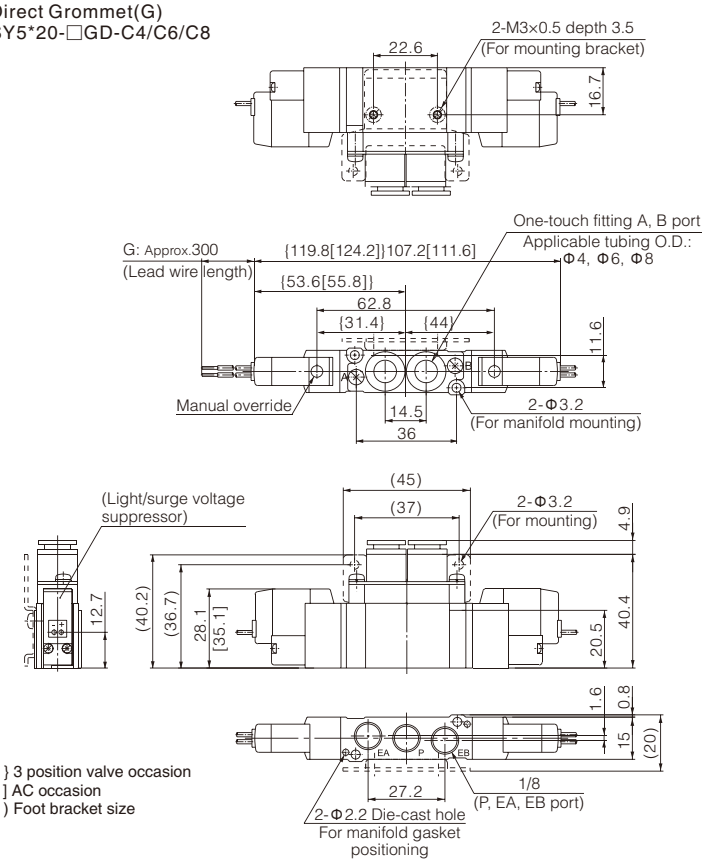


{ } 3 position valve occasion
[ ] AC occasion
( ) Foot bracket size

### 2 position single electronic control

L Terminal

SY5120-□L□□-C4/C6/C8

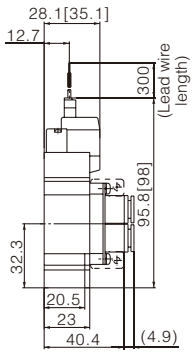


DIN terminal

SY5120-□D□□-C4/C6/C8

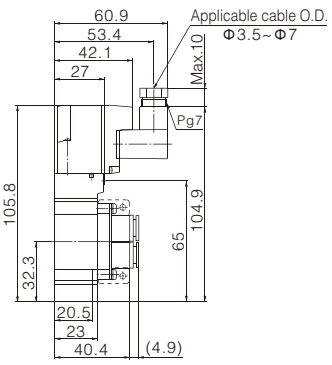


SY5320-□L□□-C4/C6/C8

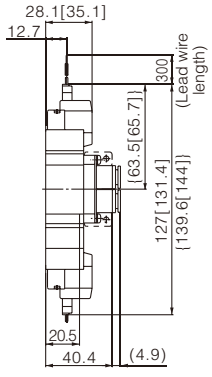


SY5320-□D□□-C4/C6/C8

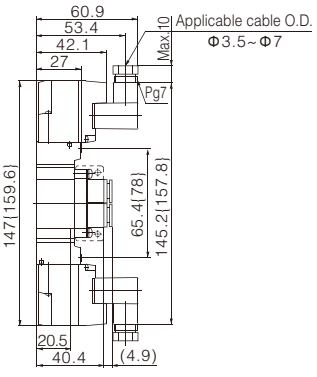

## Dimensions

### 2 position single electronic control

Direct Grommet(G)
SY7120-□G□□-$^{C8}_{C10}$

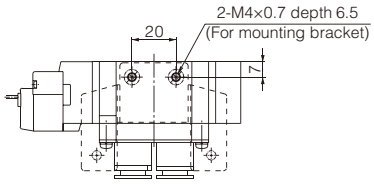


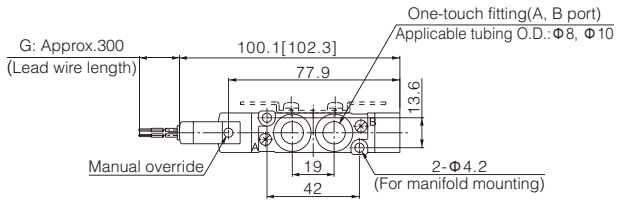


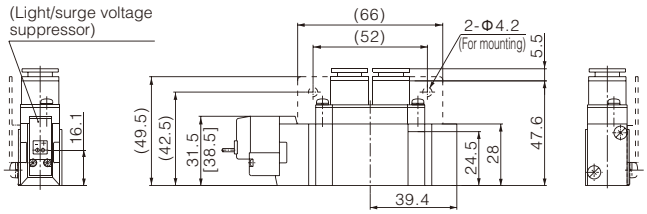


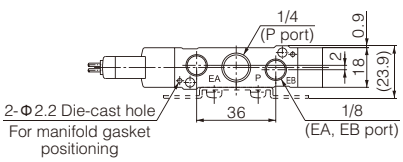


[ ] AC occasion
( ) Foot bracket size

### Foot bracket

SY7120-□G□□-$^{C8}_{C10}$

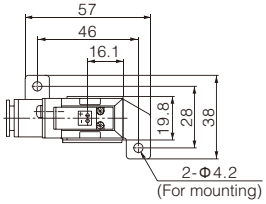


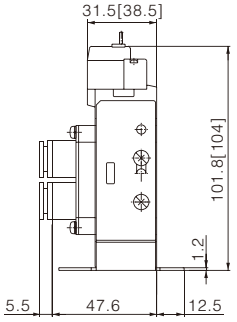


SY7120-□G□□-02

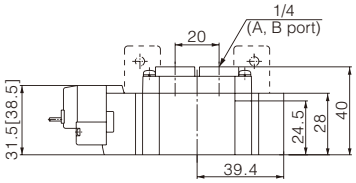


### Double electric control

(SY7220.SY7320.SY7420.SY7520)
Direct Grommet(G)
SY7*20-□GD-C8/C10

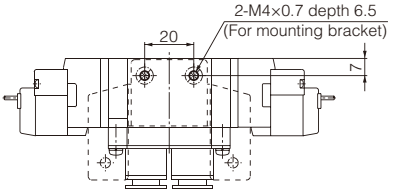


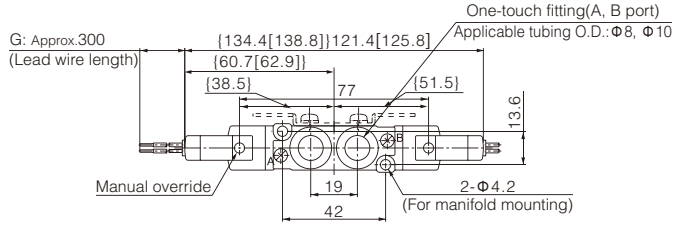


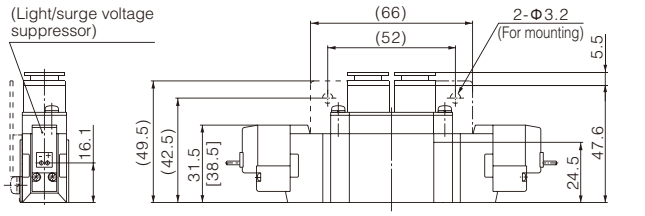


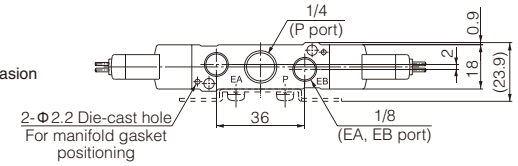


{ } 3 position valve occasion
[ ] AC occasion
( ) Foot bracket size

### 2 position single electronic control

L Terminal
SY7120-□L□□-$^{C8}_{C10}$□

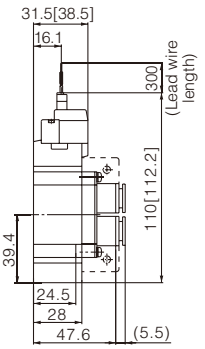


DIN Terminal
SY7120-□D□□-$^{C8}_{C10}$

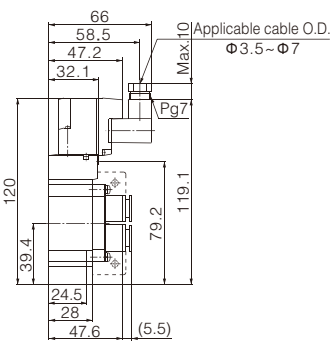


SY7$^{2}_{5}$20-□L□□-$^{C8}_{C10}$□

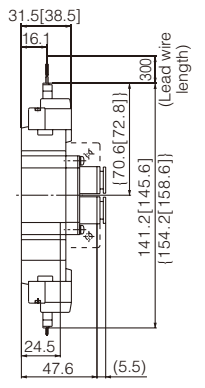


SY7$^{2}_{5}$20-□D□□-$^{C8}_{C10}$□

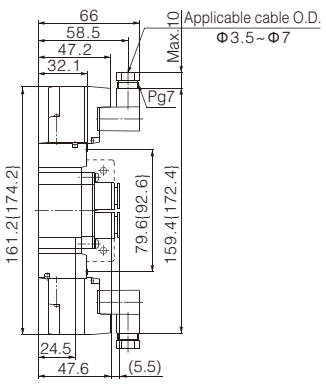

## Dimensions

### 2 position single electronic control

Direct Grommet(G)

SY9120-□G□□-$^{C8}_{C10}$
$^{C12}$

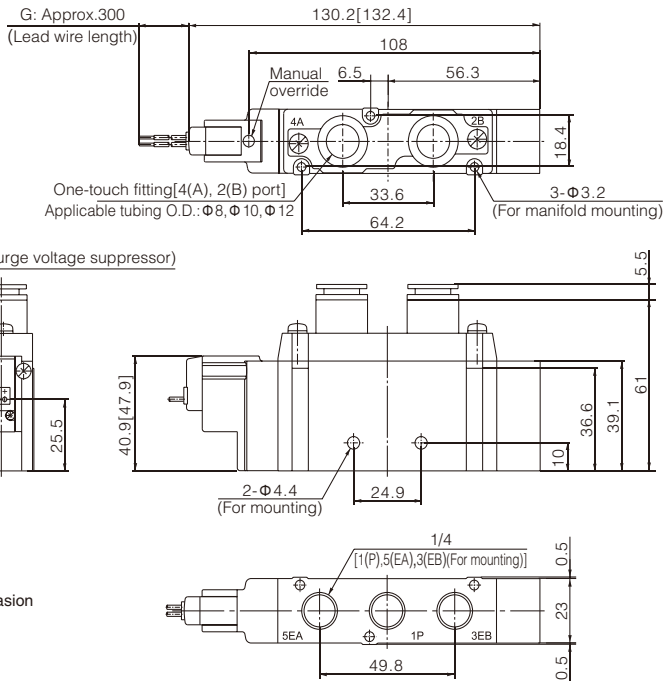


[ ] AC occasion

SY9120-□G□□-$^{02}_{03}$

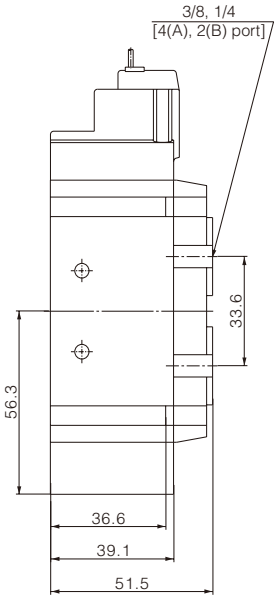


### Double electric control

(SY9220.SY9320.SY9420.SY9520)
Direct Grommet(G)
SY9*20-□GD-C8/C10

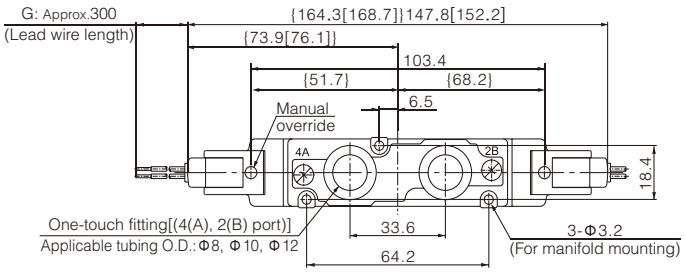


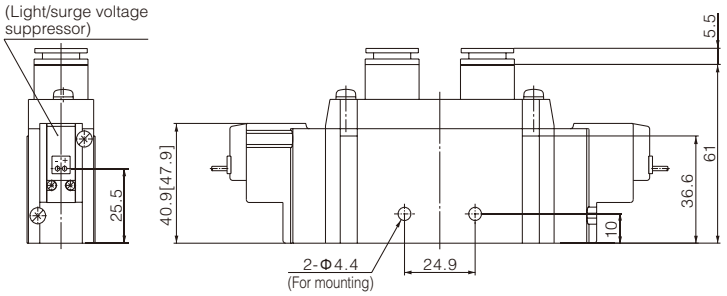


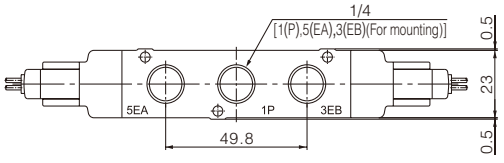


{ } 3 position valve occasion
[ ] AC occasion

### 2 position single electronic control

L Terminal
SY9120-□L□□-$^{C8}_{C10}$□
$^{C12}$

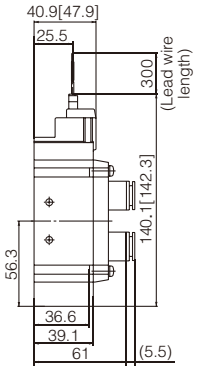


DIN Terminal
SY9120-□D□□-$^{C8}_{C10}$□
$^{C12}$

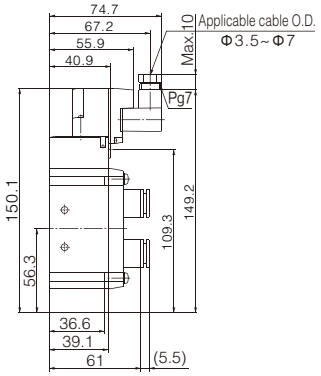


SY9$^{2}_{4}$$^{3}_{5}$20-□L□□-$^{C8}_{C10}$□
$^{C12}$

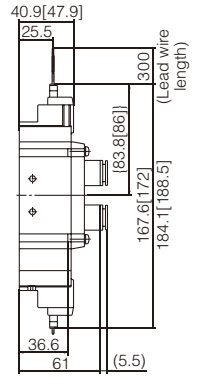


SY9$^{2}_{4}$$^{3}_{5}$20-□D□□-$^{C8}_{C10}$□
$^{C12}$

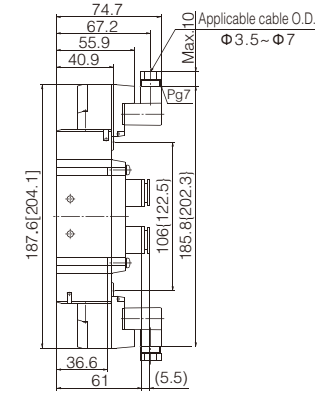



## Manifold Specifications

| Model | | SS5Y3-20 | SS5Y5-20 | SS5Y7-20 |
|---|---|---|---|---|
| Applicable valve | | SY3□20 | SY5□20 | SY7□20 |
| Manifold type | | Single base/B mount | | |
| P (SUP)/R (EXH) | | Common SUP, Common EXH | | |
| Valve stations | | 2 to 20 stations (Note) | | |
| A, B port location | | Valve | | |
| Port size | P, EA, EBport | 1/8 | 1/4 | 1/4 |
| | A, B port | M5×0.8<br>C4(One-touch fitting for Φ4)<br>C6(One-touch fitting for Φ6) | 1/8<br>C4(One-touch fitting for Φ4)<br>C6(One-touch fitting for Φ6)<br>C8(One-touch fitting for Φ8) | 1/4<br>C8(One-touch fitting for Φ8)<br>C10(One-touch fitting for Φ10) |

Note: For more than 10 stations (more than 5 stations in case of SS5Y7), supply pressure to P port on both sides and exhaust from EA/EB port on both sides.

## Flow Rate Characteristics

| Model | Port size | | Flow rate characteristics | | | | | |
|---|---|---|---|---|---|---|---|---|
| | 1,5,3 (P,EA,EB) | 4,2 (A,B) | 1→4/2(P→A/B) | | | 4/2→5/3(A/B→EA/EB) | | |
| | | | C{dm³/(s·bar)} | b | Cv | C{dm³/(s·bar)} | b | Cv |
| SS5Y3-20 | 1/8 | C6 | 0.72 | 0.29 | 0.18 | 0.80 | 0.36 | 0.21 |
| SS5Y5-20 | 1/4 | C8 | 1.9 | 0.28 | 0.48 | 2.2 | 0.20 | 0.53 |
| SS5Y7-20 | 1/4 | C10 | 3.6 | 0.31 | 0.93 | 3.6 | 0.27 | 0.88 |

Note: The value is for manifold base with 5 stations and individually operated 2 position type.

## How to Order Manifold

**SS5Y 5 20 05**

**Manifold series**

| | |
|---|---|
| 3 | SY3000 |
| 5 | SY5000 |
| 7 | SY7000 |

**Stations**

| | |
|---|---|
| 02 | 2 stations |
| ··· | ··· |
| 20 | 20stations |

※ This also includes the number of blanking plate assemblies.

## How to Order Manifold Assembly (Example)

Example

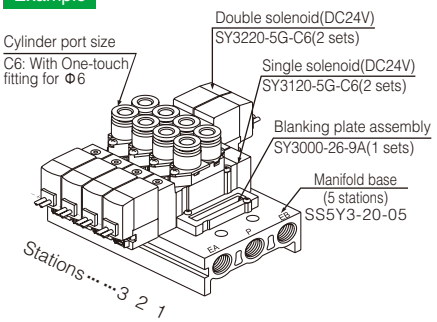


SS5Y3-20-05 ··· 1 set (Type 20, 5-station manifold base part no.)
* SY3000-26-9A ··· 1 set (Blanking plate assembly part no.)
* SY3120-5G-C6 ··· 2 sets (Single solenoid part no.)
* SY3220-5G-C6 ··· 2 sets (Double solenoid part no.)

→ The asterisk denotes the symbol for assembly. Prefix it to the part nos. of the solenoid valve, etc.

Add the valve and option part number under the manifold base part number. In the case of complex arrangement, specify them on the manifold specification sheet.

## Dimensions

Grommet (G)

SS5Y□-20-Stations

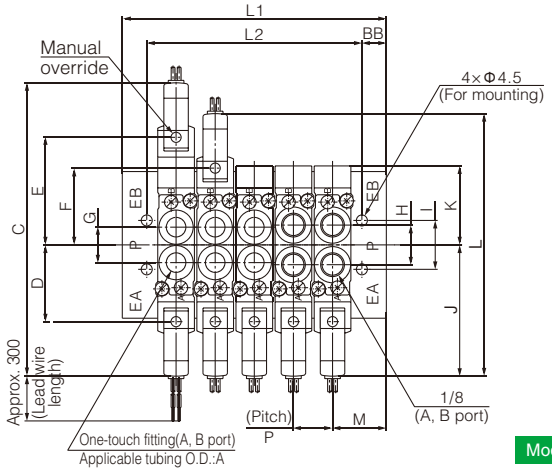


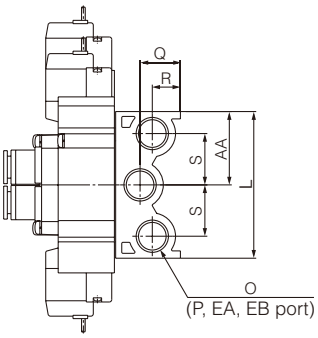


N: Stations (up to 20 Stations)

| Model | L1= | L2= |
|---|---|---|
| SS5Y3 | 40+10.5(n-2) | L1-9.5 |
| SS5Y5 | 60+16(n-2) | L1-20 |
| SS5Y7 | 55+19(n-2) | L1-9 |

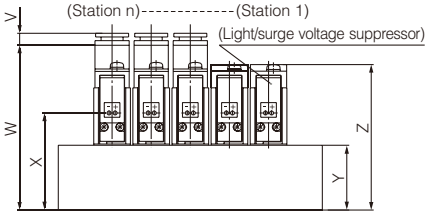


| Model | A | B | C | D | E | F | G | H | I | J | K | L |
|---|---|---|---|---|---|---|---|---|---|---|---|---|
| SS5Y3 | Φ4, Φ6 | 4.75 | 97.3[101.7] | 22.2 | 30.7 | 22.2 | 10.2 | 16 | 16 | 44.4[46.6] | 23.5 | 88.8[93.2] |
| SS5Y5 | Φ4, Φ6, Φ8 | 10 | 119.8[124.2] | 31.4 | 44 | 31.4 | 14.5 | 20 | 20 | 53.6[55.8] | 32.3 | 107.2[111.6] |
| SS5Y7 | Φ8, Φ10 | 4.5 | 134.4[138.8] | 38.5 | 51.5 | 38.5 | 19 | 21 | 21 | 60.7[62.9] | 39.4 | 121.4[125.8] |

| Model | M | N | O | P | Q | R | S | T | U | V | W | X | Y | Z | AA | BB |
|---|---|---|---|---|---|---|---|---|---|---|---|---|---|---|---|---|
| SS5Y3 | 14.7 | M5×0.5 | 1/8 | 10.5 | 12.5 | 12.5 | 16.5 | 23.5 | 49 | 3.2 | 54.1 | 33.6 | 20 | 49[56] | 23.5 | 4.75 |
| SS5Y5 | 22 | 1/8 | 1/4 | 16 | 16.5 | 11.5 | 21 | 30 | 60 | 4.9 | 67.4 | 39.7 | 26.5 | 59.5 | 30 | 10 |
| SS5Y7 | 19.25 | 1/4 | 1/4 | 19 | 16.5 | 11.5 | 21 | 30 | 60 | 5.5 | 74.6 | 43.1 | 26.5 | 67 | 30 | 4.5 |

Note: [ ] is the situation of AC voltage.




## Specification

| Model | 3E1 | 3E2 | 4E1 | 4E2 | 4E2C,P,R |
|---|---|---|---|---|---|
| Bore No. | 6A | | | | |
| Port size | Rc1/8 | | | | |
| No. of port | 3 | | 5 | | |
| No. of position | 2 | | | | 3 |
| Medium | Air | | | | |
| Operating perssure range | 0.15~0.8MPa | | | | 0.2~0.7MPa |
| Operating pressue (LP) | 0~0.8MPa | | | | 0~0.7MPa |
| External pilot pressure (LP) | 0.15~0.8MPa | | | | 0.2~0.7MPa |
| Proof pressure | 1MPa | | | | |
| Effective orifice | 15mm² | | 12mm² | | 9mm² |
| Ambient temperature | -5~+50℃ (No freezing) | | | | |
| Reponse time | 30ms | | | | |
| Voltage | AC110V, 220V(50/60)Hz, DC24V | | | | |
| Power consumption | AC=3.7/3.1VA, DC=3W | | | | |
| Available voltage range | ±10% | | | | |
| Insulation class | F Class | | | | |
| Weight | 120g | 172g | 124g | 176g | 190g |

## Symbol

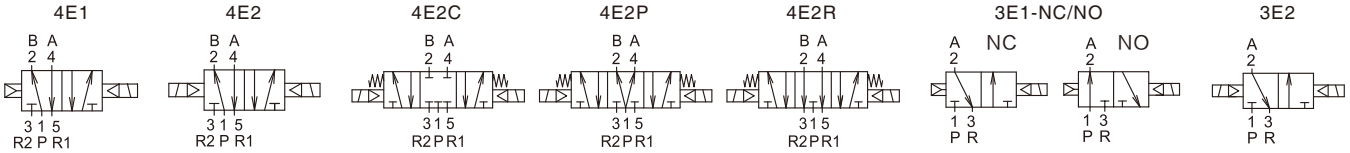


## Ordering code

**MVSD** | **180** | **4** | **E2** | **C** | **NC** | **AC110** | **L** | **LP** | **G**

**Model**: MVSD

**Body width**: 180

**No. of port**

| | |
|---|---|
| 3 | 3 way (3 port) |
| 4 | 4 way (5 port) |

**Coil**

| | |
|---|---|
| E1 | Single Solenoid |
| E2 | Double Solenoid |

**No. of position**

| | |
|---|---|
| C | Closed center |
| P | Pressure center |
| R | Exhaust center |

(Only for 4E2 type)

**Acting type**

| | |
|---|---|
| NC | Normally closed |
| NO | Normally open |

(Only for 3E1 type)

**Voltage**

| |
|---|
| AC220V(50/60)Hz |
| AC110V(50/60)Hz |
| DC24V |

**Electrical entry**

| | |
|---|---|
| Blank | DIN connector |
| L | DIN connector with LED indicator |
| W | Lead wire |

(Only for MVSD series)

**Pilot type**

| | |
|---|---|
| Blank | Standard |
| LP | External pilot |

**Thread type**

| | |
|---|---|
| Blank | Rc thread |
| G | G thread |
| NPT | NPT thread |

## Flow features

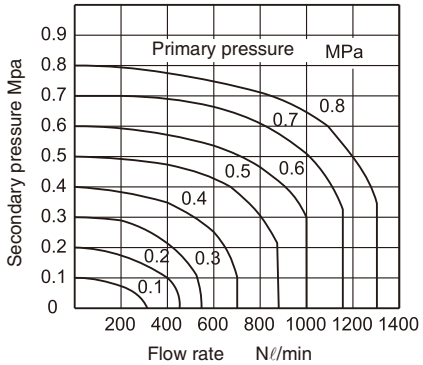

## Dimensions

### MVSD-180-4E1

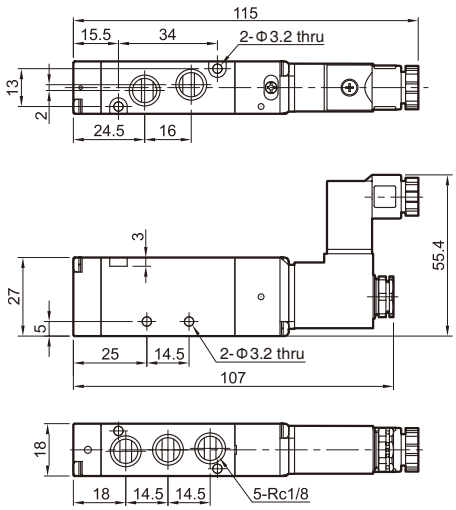


### MVSD-180-4E2

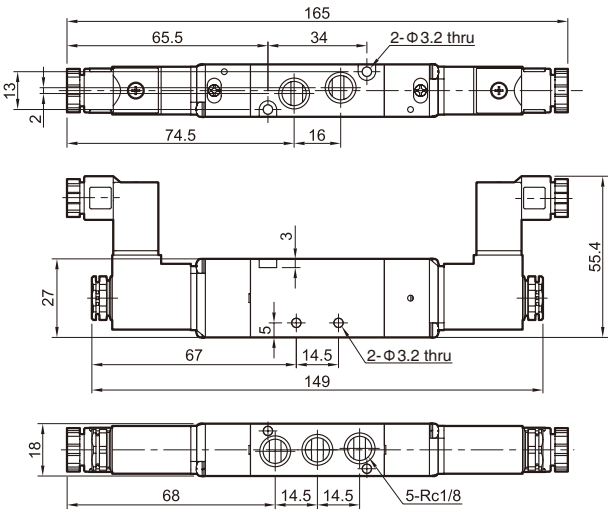


### MVSD-180-4E2C.P.R

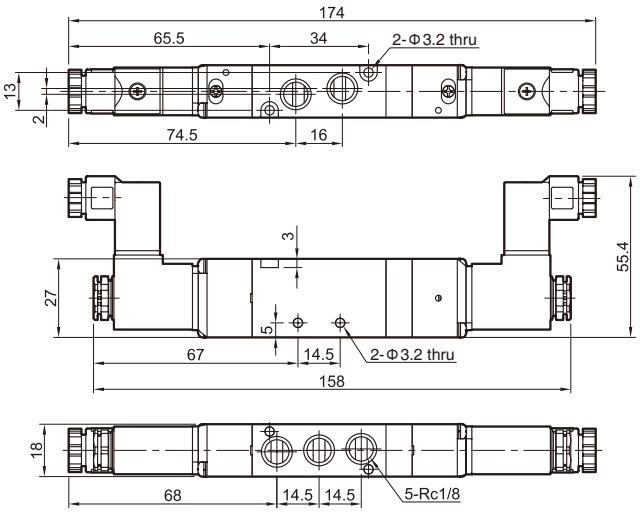


### LP

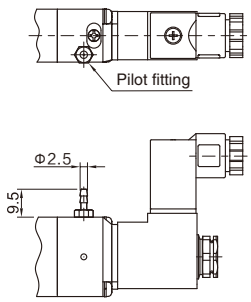


### MVSD-180-3E1-NC/NO

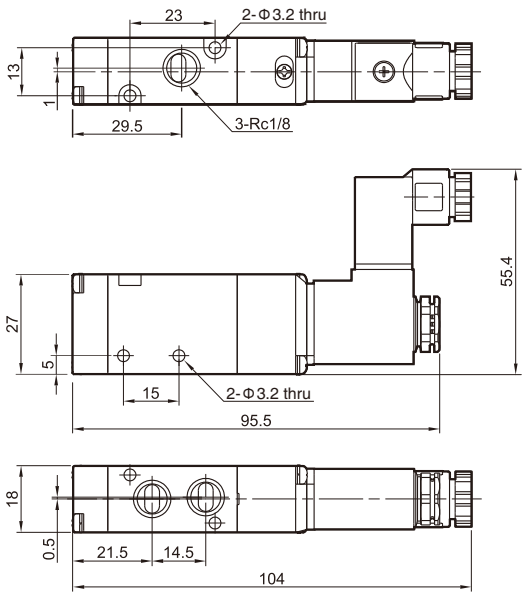


### MVSD-180-3E2

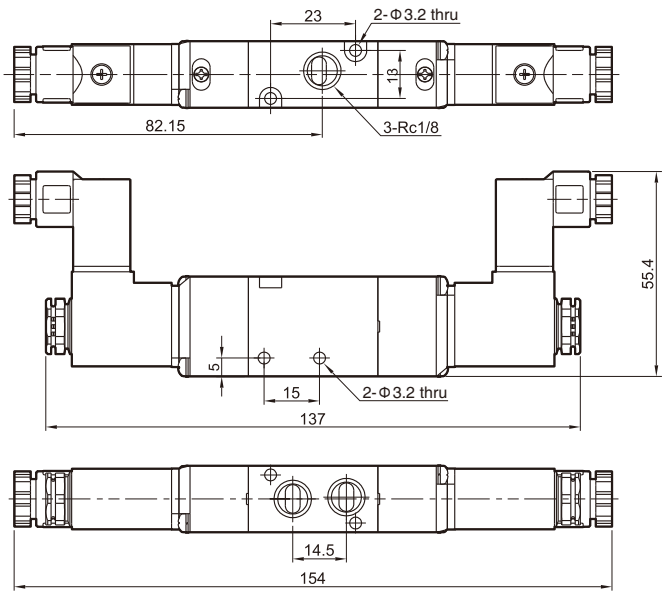



## Specification

| Model | 3E1 | 3E2 | 4E1 | 4E2 | 4E2C.P.R |
|---|---|---|---|---|---|
| Bore No. | 8A | | 6A,8A | | |
| Port size | Rc1/4 | | Rc1/8,Rc1/4 | | |
| No. of port | 3 | | 5 | | |
| No. of position | 2 | | | | 3 |
| Medium | Air | | | | |
| Operating perssure range | 0.2~0.8MPa | | | | 0.3~0.8MPa |
| Operating pressue (LP) | 0~0.8MPa | | | | |
| External pilot pressure (LP) | 0.2~0.8MPa | | | | 0.3~0.8MPa |
| Proof pressure | 1MPa | | | | |
| Effective orifice | 18mm² | | | | 16mm² |
| Ambient temperature | -5~+50℃ (No freezing) | | | | |
| Reponse time | 30ms | | | | 40ms |
| Voltage | AC110V, 220V(50/60)Hz, DC24V | | | | |
| Power consumption | AC=4.8/4.4VA, 6/4.9VA DC=2W | | | | |
| Available voltage range | ±10% | | | | |
| Insulation class | F Class | | | | |
| Weight | 203g | 296g | 184g | 292g | 338g |

## Symbol

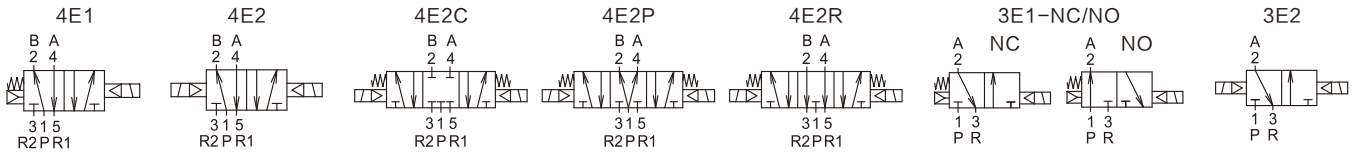


## Ordering code

**MVSC 220 M 4 E2 C NC □ AC110 L LP G**

**Model**: MVSC

**Body width**: 220

**Valve type**

| | |
|---|---|
| Blank | Body ported type |
| M | Manifold type |

(Only for 4E* )

**No. of port**

| | |
|---|---|
| 3 | 3 way (3 port) |
| 4 | 4 way (5 port) |

**Coil**

| | |
|---|---|
| E1 | Single Solenoid |
| E2 | Double Solenoid |

**No. of position**

| | |
|---|---|
| C | Closed center |
| P | Pressure center |
| R | Exhaust center |
| D | Differential |

(Only for 4E2 type)

**Acting type**

| | |
|---|---|
| NC | Normally closed |
| NO | Normally open |

(Only for 3E1 type)

**Port size**

| | |
|---|---|
| Blank | Rc1/4 |
| 6A | Rc1/8 |

(Only for 4E* & body ported type)

**Voltage**

| |
|---|
| AC220V(50/60)Hz |
| AC110V(50/60)Hz |
| DC24V |

**Electrical entry**

| | |
|---|---|
| Blank | DIN connector |
| L | DIN connector with LED indicator |
| E | Explosion protection (Table 1) |

(E type use black coil)

**Pilot type**

| | |
|---|---|
| LP | External pilot |

**Thread type**

| | |
|---|---|
| Blank | Rc thread |
| G | G thread |
| NPT | NPT thread |

(Only for body ported type)

**Table 1 Property for explosion-proof type**

| | |
|---|---|
| Anti-explosion class | EEx m II T4 |
| Voltage | AC110V. 220V.(50/60)Hz. DC24V. |
| Power consumption | AC=4.4VA DC=5W |
| Available voltage range | ±10% |
| Insulation class | F class |
| Wire length | 3 m |

## Flow features

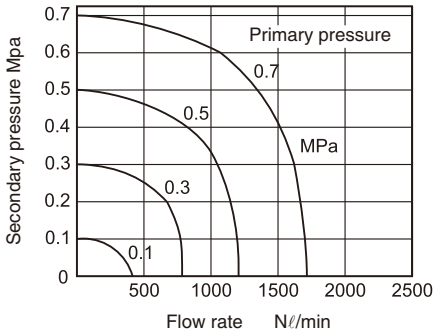

## Dimensions

### MVSC-220-4E1

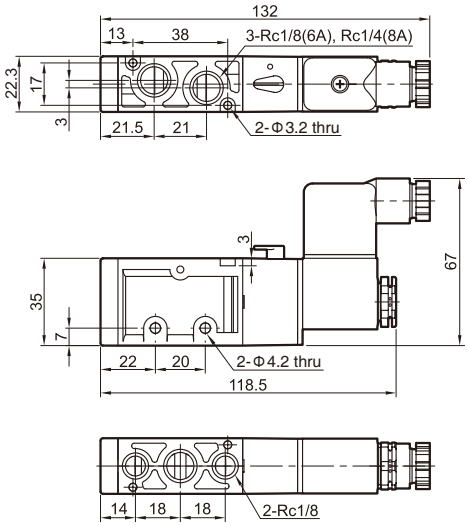


### MVSC-220-4E2

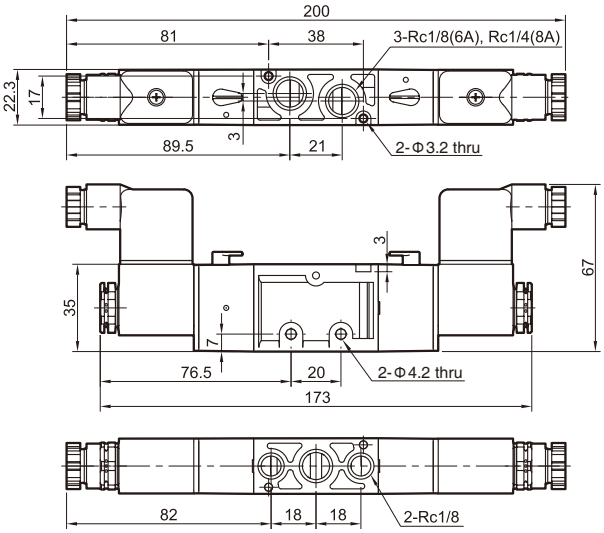


### MVSC-220-4E2C.P.R

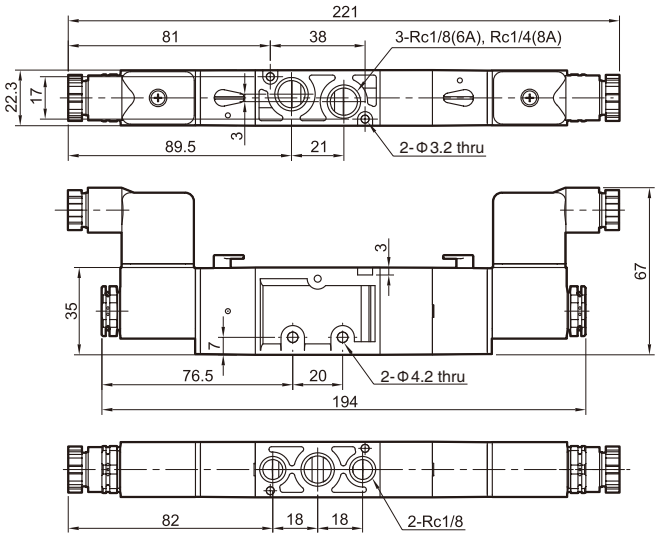


### LP

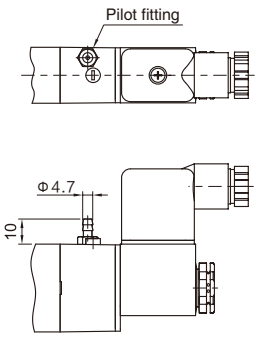


### MVSC-220-3E1-NC/NO

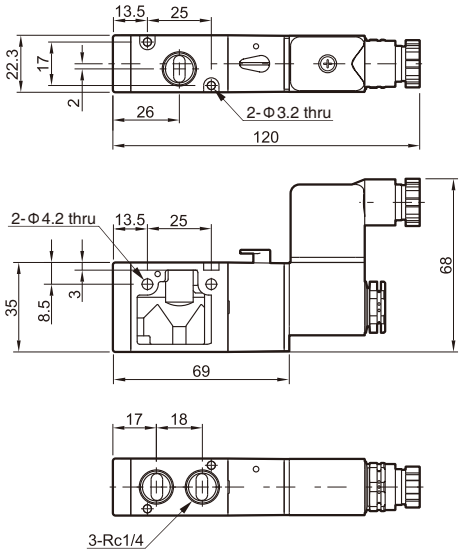


### MVSC-220-3E2

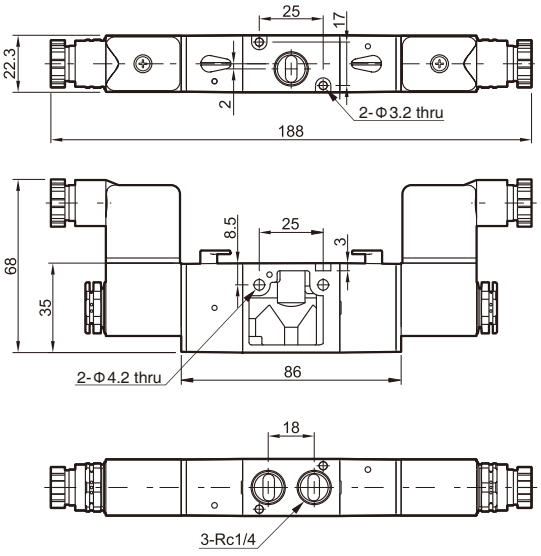



## Specification

| Model | 4E1 | 4E2 | 4E2C.P.R |
|---|---|---|---|
| Bore No. | 8A | | |
| Port size | Rc1/4 | | |
| No. of port | 5 | | |
| No. of position | 2 | | 3 |
| Medium | Air | | |
| Operating perssure range | 0.2~0.8MPa | | 0.3~0.8MPa |
| Operating pressue (LP) | 0~0.8MPa | | |
| External pilot pressure (LP) | 0.2~0.8MPa | | 0.3~0.8MPa |
| Proof pressure | 1MPa | | |
| Effective orifice | 18mm² | | 16mm² |
| Ambient temperature | -5~+50℃ (No freezing) | | |
| Reponse time | 40ms | | |
| Voltage | AC110V, 220V(50/60)Hz, DC24V | | |
| Power consumption | AC=4.8/4.4VA, 6/4.9VA DC2W | | |
| Available voltage range | ±10% | | |
| Insulation class | F Class | | |
| Weight | 228g | 314g | 444g |

## Symbol

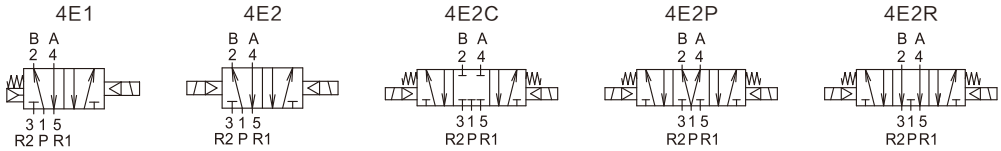


## Ordering code

**MVSC** **260** **4** **E2** **C** **AC110** **L** **LP** **G**

**Model**: MVSC

**Body width**: 260

**No. of port**

| | |
|---|---|
| 4 | 4 way (5 port) |

**Coil**

| | |
|---|---|
| E1 | Single Solenoid |
| E2 | Double Solenoid |

**No. of position**

| | |
|---|---|
| C | Closed center |
| P | Pressure center |
| R | Exhaust center |

(Only for 4E2 type)

**Voltage**

| |
|---|
| AC220V(50/60)Hz |
| AC110V(50/60)Hz |
| DC24V |

**Electrical entry**

| | |
|---|---|
| Blank | DIN connector |
| L | DIN connector with LED indicator |
| E | Explosion protection (Table 1) |

(E type use black coil)

**Pilot type**

| | |
|---|---|
| LP | External pilot |

**Thread type**

| | |
|---|---|
| Blank | Rc thread |
| G | G thread |
| NPT | NPT thread |

(Only for body ported type)

**Table 1 Property for explosion-proof type**

| | |
|---|---|
| Anti-explosion class | EEx m II T4 |
| Voltage | AC110V. 220V.(50/60)Hz. DC24V. |
| Power consumption | AC=4.4VA DC=5W |
| Available voltage range | ±10% |
| Insulation class | F class |
| Wire length | 3 m |

## Flow features

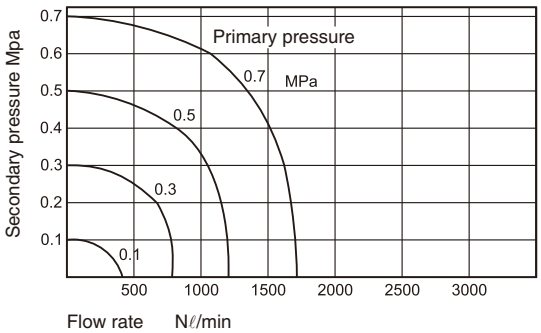

## Dimensions

### MVSC-260-4E1

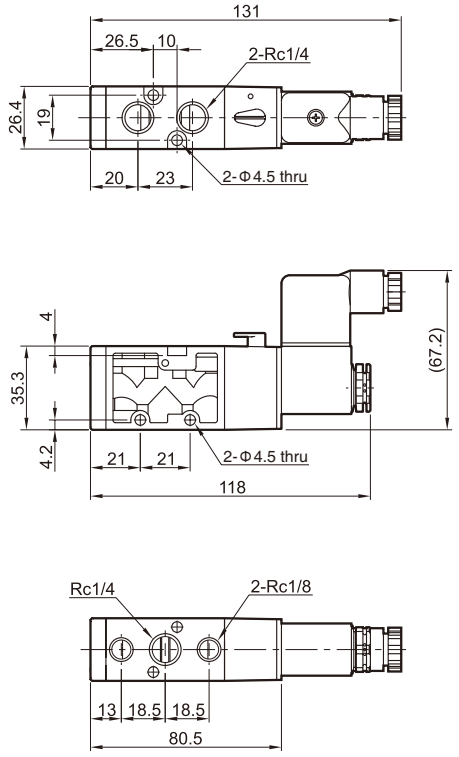


### MVSC-260-4E2

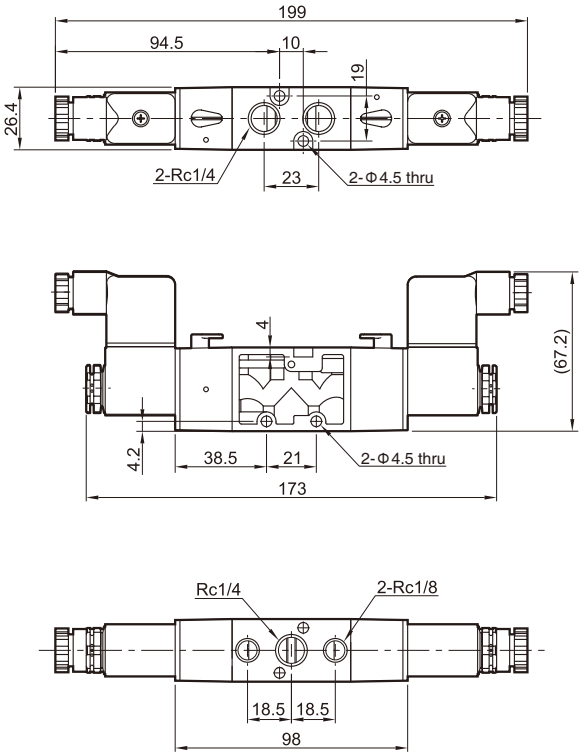


### MVSC-260-4E2C.P.R

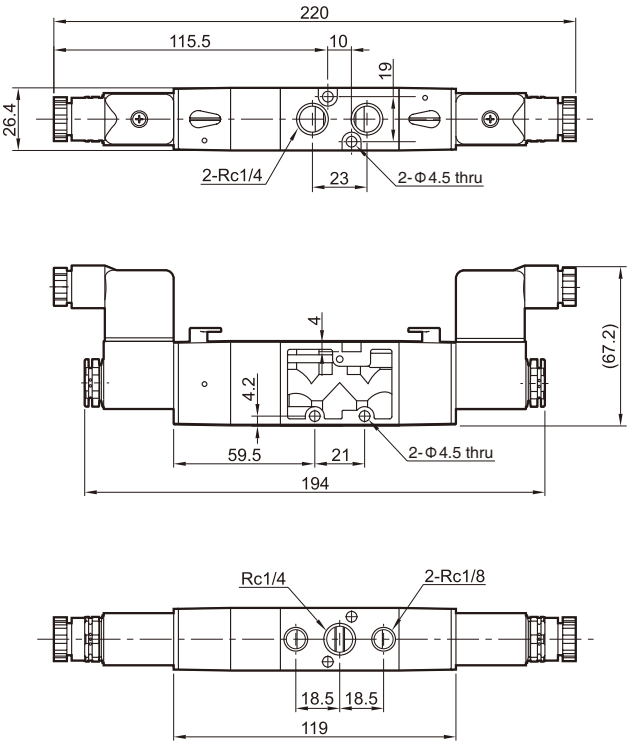


### LP

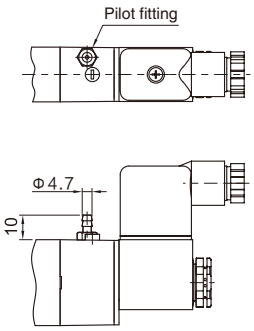



## Specification

| Model | 3E1 | 3E2 | 4E1 | 4E2 | 4E2C.P.R |
|---|---|---|---|---|---|
| Bore No. | 10A | | | | |
| Port size | Rc3/8 | | | | |
| No. of port | 3 | 5 | | | |
| No. of position | 2 | | | | 3 |
| Medium | Air | | | | |
| Operating perssure range | 0.2~0.8MPa | | | | 0.3~0.8MPa |
| Operating pressue (LP) | 0~0.8MPa | | | | |
| External pilot pressure (LP) | 0.2~0.8MPa | | | | 0.3~0.8MPa |
| Proof pressure | 1MPa | | | | |
| Effective orifice | 30mm² | 35mm² | | | 25mm² |
| Ambient temperature | -5~+50℃ (No freezing) | | | | |
| Reponse time | 50ms | | | | |
| Voltage | AC110V, 220V(50/60)Hz, DC24V | | | | |
| Power consumption | AC=4.8/4.4VA, 6/4.9VA DC=2W | | | | |
| Available voltage range | ±10% | | | | |
| Insulation class | F Class | | | | |
| Weight | 350g | 439g | 293g | 387g | 565g |

## Symbol

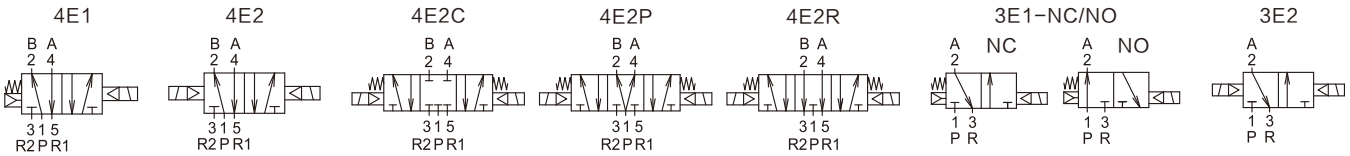


## Ordering code

**MVSC 300 4 E2 C NC AC110 L LP G**

**Model**

**Body width**

**No. of port**

| | |
|---|---|
| 3 | 3 way (3 port) |
| 4 | 4 way (5 port) |

**Coil**

| | |
|---|---|
| E1 | Single Solenoid |
| E2 | Double Solenoid |

**No. of position**

| | |
|---|---|
| C | Closed center |
| P | Pressure center |
| R | Exhaust center |

(Only for 4E2 type)

**Acting type**

| | |
|---|---|
| NC | Normally closed |
| NO | Normally open |

(Only for 3E1 type)

**Voltage**

| |
|---|
| AC220V(50/60)Hz |
| AC110V(50/60)Hz |
| DC24V |

**Electrical entry**

| | |
|---|---|
| Blank | DIN connector |
| L | DIN connector with LED indicator |
| E | Explosion protection (Table 1) |

(E type use black coil)

**Pilot type**

| | |
|---|---|
| LP | External pilot |

**Thread type**

| | |
|---|---|
| Blank | Rc thread |
| G | G thread |
| NPT | NPT thread |

(Only for body ported type)

**Table 1 Property for explosion-proof type**

| | |
|---|---|
| Anti-explosion class | EEx m II T4 |
| Voltage | AC110V. 220V.(50/60)Hz. DC24V. |
| Power consumption | AC=4.4VA DC=5W |
| Available voltage range | ±10% |
| Insulation class | F class |
| Wire length | 3 m |

## Flow features

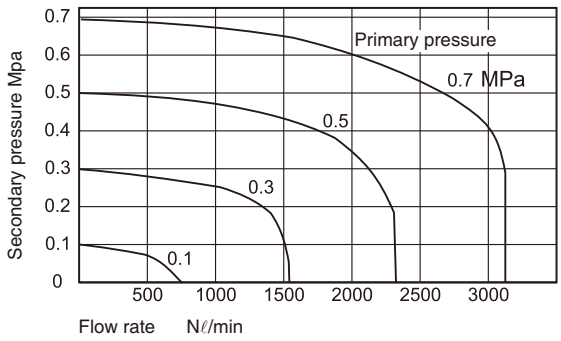

## Dimensions

### MVSC-300-4E1

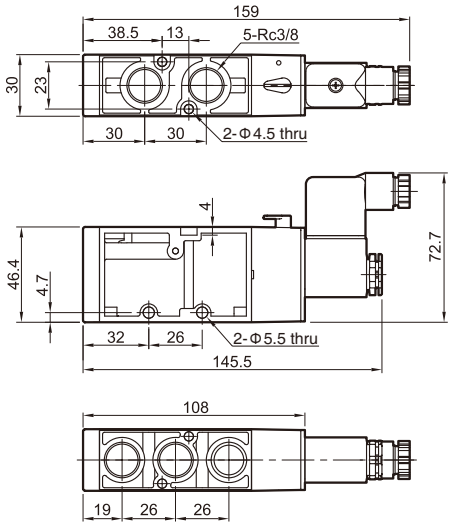


### MVSC-300-4E2

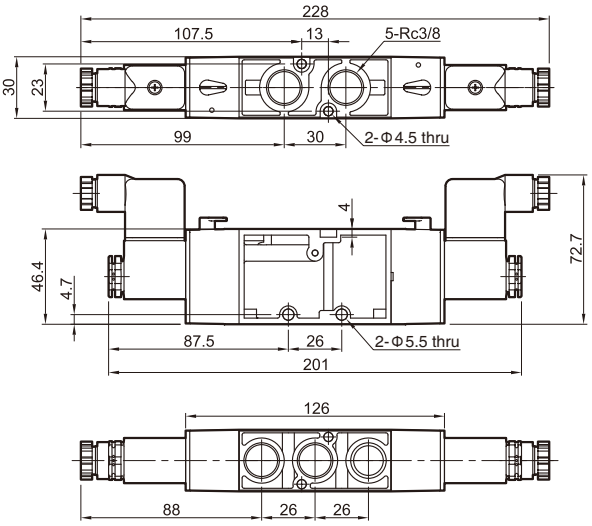


### MVSC-300-4E2C.P.R

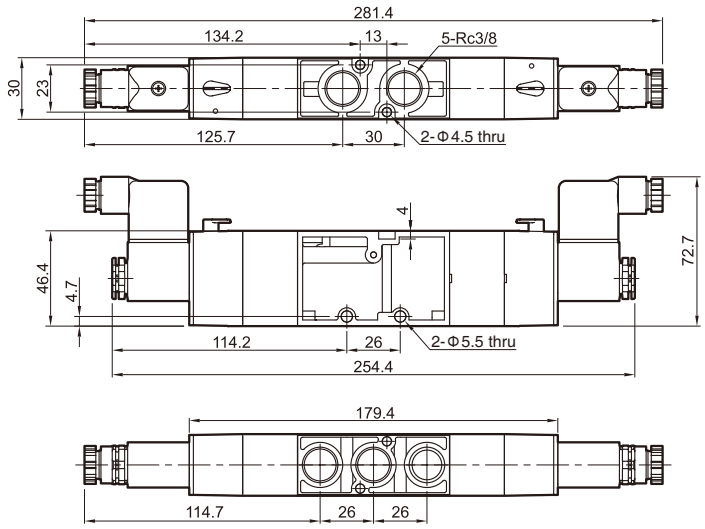


### LP

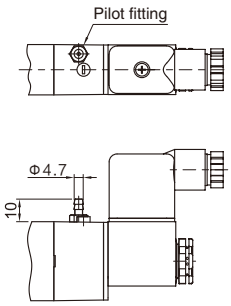


### MVSC-300-3E1-NC/NO

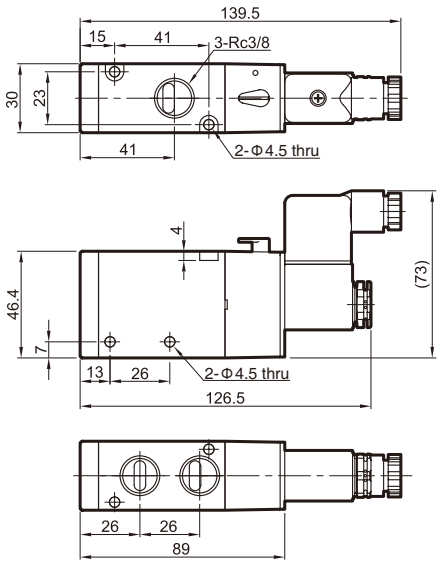


### MVSC-300-3E2

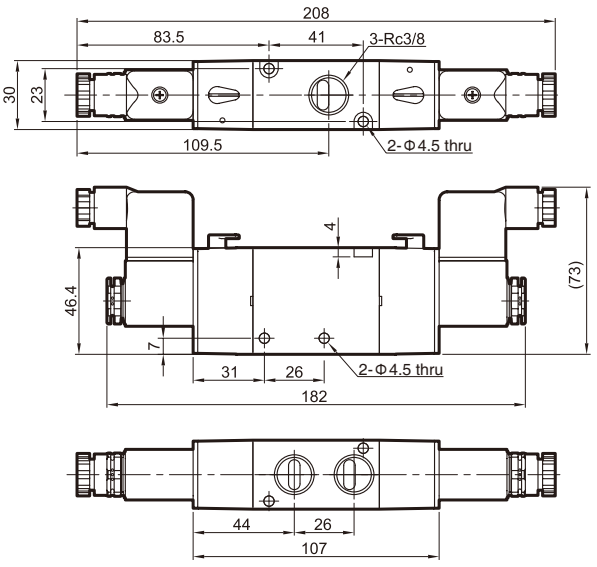



## Specification

| Model | 3E1 | 3E2 | 4E1 | 4E2 | 4E2C.P.R |
|---|---|---|---|---|---|
| Bore No. | 15A | | | | |
| Port size | G1/2 | | | | |
| No. of port | 3 | | 5 | | |
| No. of position | 2 | | | | 3 |
| Medium | Air | | | | |
| Operating perssure range | 0.2~0.8MPa | | | | 0.3~0.8MPa |
| Operating pressue (LP) | 0~0.8MPa | | | | |
| External pilot pressure (LP) | 0.2~0.8MPa | | | | 0.3~0.8MPa |
| Proof pressure | 1MPa | | | | |
| Effective orifice | 60mm² | | 50mm² | | 30mm² |
| Ambient temperature | -5~+50℃ (No freezing) | | | | |
| Reponse time | 50ms | | | | |
| Voltage | AC110V, 220V(50/60)Hz, DC24V | | | | |
| Power consumption | AC=4.8/4.4VA, 6/4.9VA DC2W | | | | |
| Available voltage range | ±10% | | | | |
| Insulation class | F Class | | | | |
| Weight | 353g | 437g | 330g | 452g | 634g |

## Symbol

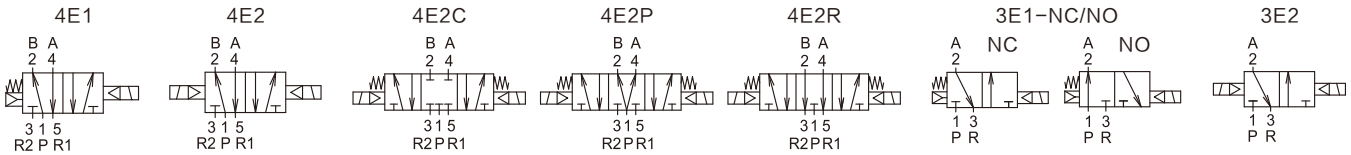


## Ordering code

**MVSC 460 4 E2 C NC AC110 L LP G**

**Model**

**Body width**

**No. of port**

| | |
|---|---|
| 3 | 3 way (3 port) |
| 4 | 4 way (5 port) |

**Coil**

| | |
|---|---|
| E1 | Single Solenoid |
| E2 | Double Solenoid |

**No. of position**

| | |
|---|---|
| C | Closed center |
| P | Pressure center |
| R | Exhaust center |

(Only for 4E2 type)

**Acting type**

| | |
|---|---|
| NC | Normally closed |
| NO | Normally open |

(Only for 3E1 type)

**Voltage**

| |
|---|
| AC220V(50/60)Hz |
| AC110V(50/60)Hz |
| DC24V |

**Electrical entry**

| | |
|---|---|
| Blank | DIN connector |
| L | DIN connector with LED indicator |
| E | Explosion protection (Table 1) |

(E type use black coil)

**Pilot type**

| | |
|---|---|
| LP | External pilot |

**Thread type**

| | |
|---|---|
| Blank | Rc thread |
| G | G thread |
| NPT | NPT thread |

(Only for body ported type)

**Table 1 Property for explosion-proof type**

| | |
|---|---|
| Anti-explosion class | EEx m II T4 |
| Voltage | AC110V. 220V.(50/60)Hz. DC24V. |
| Power consumption | AC=4.4VA DC=5W |
| Available voltage range | ±10% |
| Insulation class | F class |
| Wire length | 3 m |

## Flow features

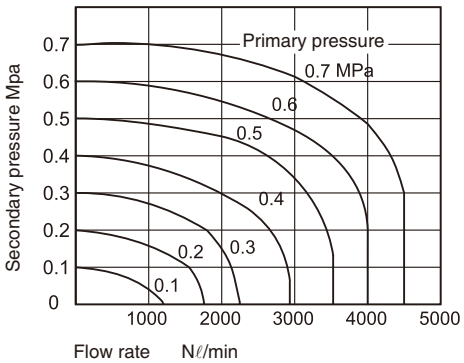

## Dimensions

### MVSC-460-4E1

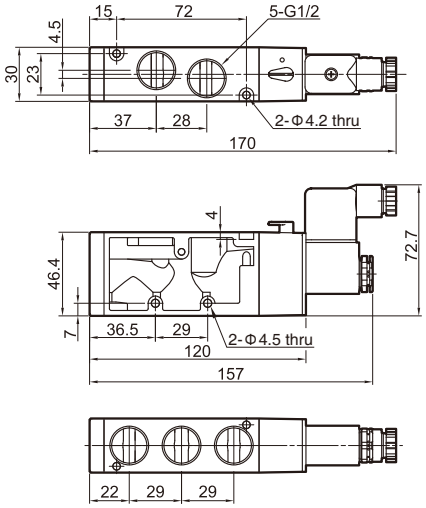


### MVSC-460-4E2

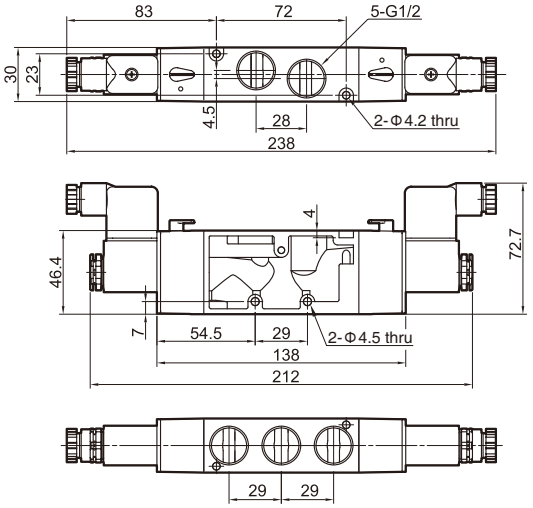


### MVSC-460-4E2C.P.R

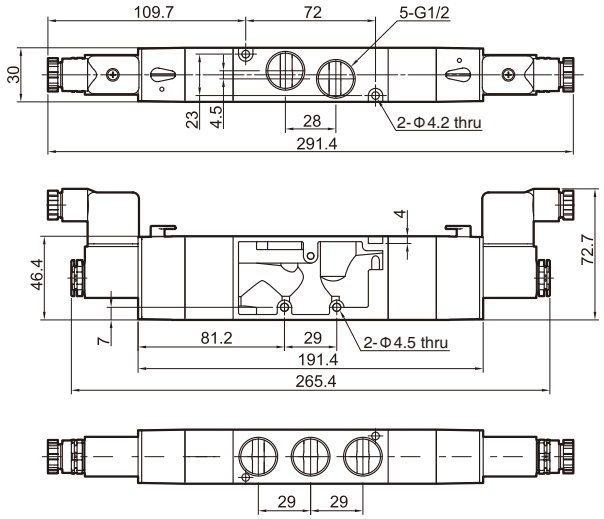


### LP

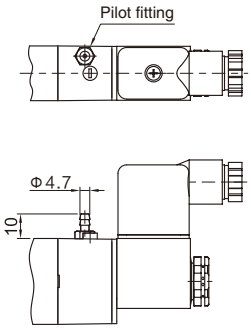


### MVSC-460-3E1-NC/NO

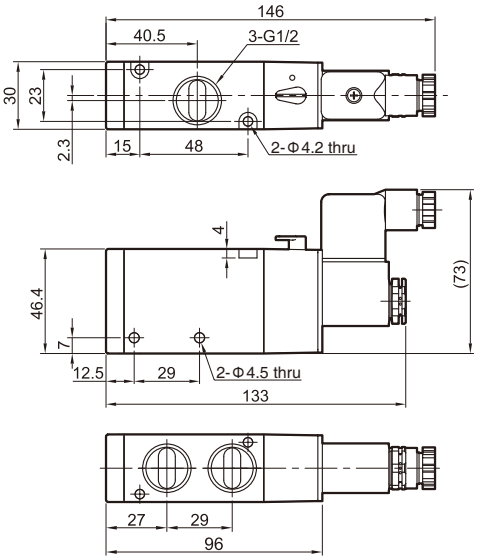


### MVSC-460-3E2

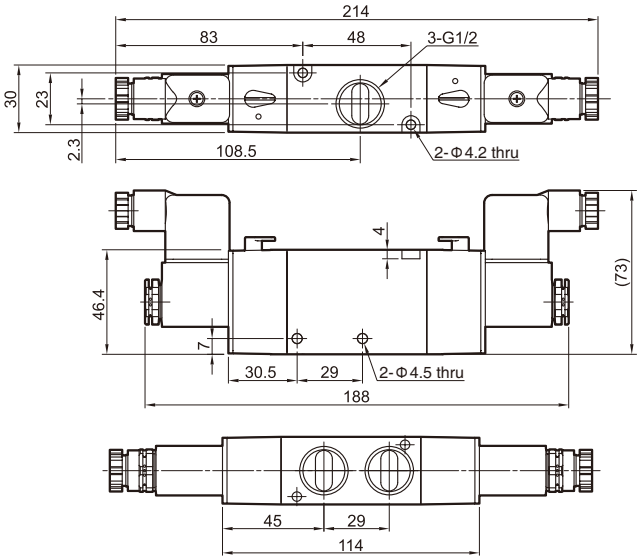



## Specification

| Model | 3H210-06 | 3H210-08 | 3H310-08 | 3H310-10 | 3H410-15 |
|---|---|---|---|---|---|
| Fluid | Air(to be filtered by 40 μm filter element) | | | | |
| Operating | Manual control direct acting tupe | | | | |
| Port size ① | G1/8 | G1/4 | | G3/8 | G1/2 |
| Orifice size | 14.0mm² (Cv=0.78) | 16.0mm² (Cv=0.89) | 25.0mm² (Cv=1.39) | 30.0mm² (Cv=1.67) | 50.0mm² (Cv=2.79) |
| Valve type | 3/2 Way | | | | |
| Lubrication ② | Not required | | | | |
| Pressure range | 0~1.0MPa(0~145psi) | | | | |
| Proof pressure | 1.2MPa(170psi) | | | | |
| Temperature | -20~70℃ | | | | |
| Material body | Aluminum alloy | | | | |

① PT thread, G thread and NPT thread are available.
② Once lubricated air is used, continue with same medium to optimise valve life span. It is suggested to use ISO VG32 or the oil with the same grade.

## Symbol




## Ordering code

| 3H | 2 | 10 | 08 |
|---|---|---|---|
| **Model** | **Code** | **Valve type** | **Port size** |
| 3H Hand lever valve (3/2 way) | 2 200 Series | 10 3/2 Way | 06 1/8" |
| | 3 300 Series | | 08 1/4" |
| | 4 400 Series | | 10 3/8" |
| | | | 15 1/2" |

## Product feature

1. Manual operation, smooth actuation, and exact and reliable orientation.
2. Sliding column structure has good tightness and light weight and is easy to install and dismount.
3. Internal hole adopts special processing technology which has little attrition friction, long service life.
4. No need to add oil for lubrication.
5. Panel-mounting makes it convenient to install and apply.

## Flow chart

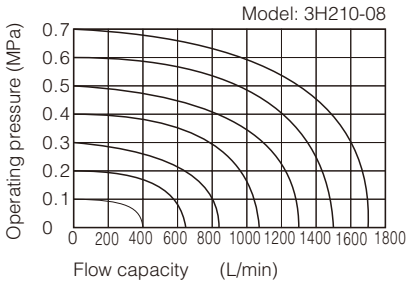


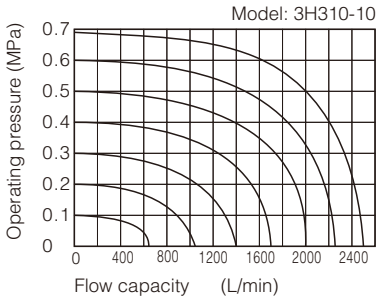


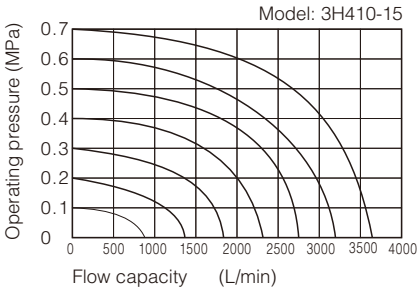


## Dimensions

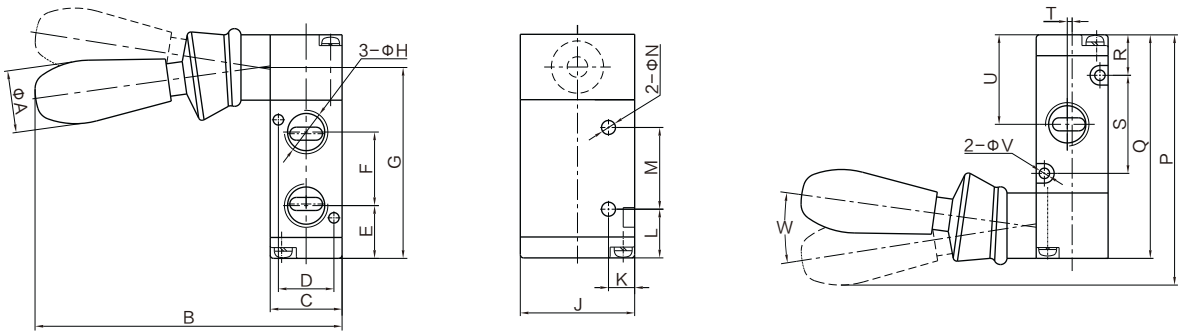


| Model\Item | A | B | C | D | E | F | G | H | J | K | L | M | N | P | Q | R | S | T | U | V | W |
|---|---|---|---|---|---|---|---|---|---|---|---|---|---|---|---|---|---|---|---|---|---|
| 3H210-06 | 19 | 94 | 22 | 17 | 16.2 | 22.5 | 58.4 | PT1/8 | 35 | 8 | 14.9 | 25 | 4.3 | 76.5 | 68.4 | 12.4 | 30 | 0 | 27.4 | 3.2 | 16.8 |
| 3H210-08 | 19 | 94 | 22 | 17 | 16.2 | 22.5 | 58.4 | PT1/4 | 35 | 8 | 14.9 | 25 | 4.3 | 76.5 | 68.4 | 12.4 | 30 | 15 | 27.4 | 3.2 | 16.8 |
| 3H310-08 | 19 | 98.4 | 27 | 20 | 20.3 | 24 | 67.3 | PT1/4 | 40 | 10 | 14.8 | 30 | 4.3 | 85.2 | 77.3 | 14.8 | 35 | 0 | 32.3 | 4.3 | 16.5 |
| 3H310-10 | 19 | 98.4 | 27 | 20 | 20.3 | 24 | 67.3 | PT3/8 | 40 | 10 | 14.8 | 30 | 4.3 | 85.2 | 77.3 | 14.8 | 35 | 2 | 32.3 | 4.3 | 16.5 |
| 3H410-15 | 19 | 105 | 34 | 27 | 23 | 36 | 84.5 | PT1/2 | 50 | 13.5 | 16 | 50 | 5.2 | 105 | 95.5 | 19.5 | 43 | 3 | 41 | 4.3 | 22.3 |

# 4H Series
## Hand Lever Valve(5/2 Way, 5/3 Way)



## Specifications

| Model | 210−06 | 230−06 | 210−08 | 230−08 | 310−08 | 330−08 | 310−10 | 330−10 |
|---|---|---|---|---|---|---|---|---|
| Fluid | Air(to be filtered by 40 μm filter element) | | | | | | | |
| Operating | Manual control direct acting tupe | | | | | | | |
| Port size ① | In=Out =Exhaust=1/8" | | In=Out=1/4" Exhaust=1/8" | | In=Out =Exhaust=1/4" | | In=Out=3/8" Exhaust=1/4" | |
| Orifice size | 14.0mm² (Cv=0.78) | 12.0mm² (Cv=0.67) | 16.0mm² (Cv=0.89) | 12.0mm² (Cv=0.67) | 25.0mm² (Cv=1.39) | 18.0mm² (Cv=1.00) | 30.0mm² (Cv=1.67) | 18.0mm² (Cv=1.00) |
| Valve type | 5/2 Way | 5/3 Way | 5/2 Way | 5/3 Way | 5/2 Way | 5/3 Way | 5/2 Way | 5/3 Way |
| Lubrication ② | Not required | | | | | | | |
| Pressure range | 0~1.0MPa(0~145psi) | | | | | | | |
| Proof pressure | 1.5MPa(215psi) | | | | | | | |
| Temperature | -20~70℃ | | | | | | | |
| Material body | Aluminum alloy | | | | | | | |
| Operating angle | ±15° | ±8.5° | ±15° | ±8.5° | ±18° | ±10° | ±18° | ±10° |

① PT thread, G thread and NPT thread are available.
② Once lubricated air is used, continue with same medium to optimise valve life span. It is suggested to use ISO VG32 or the oil with the same grade.

## Symbol

10(Manual return) 10(Spring return) 30(Manual return)

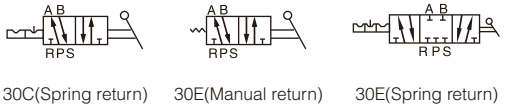


30C(Spring return) 30E(Manual return) 30E(Spring return)




## Ordering code

**4H** **2** **10** **10** **□**

| Model | |
|---|---|
| 4H | Manual return |
| 4HA | Spring return |

| Code | |
|---|---|
| 2 | 200 Series |
| 3 | 300 Series |

| Valve type | |
|---|---|
| 10 | 5/2 Way |
| 30C | 5/3 Way closed center |
| 30E | 5/3 Way exhaust center |

| Port size | | |
|---|---|---|
| Code | Port size | |
| 200 Series | 06 | 1/8" |
| | 08 | 1/4" |
| 300 Series | 08 | 1/4" |
| | 10 | 3/8" |

| Thread type | |
|---|---|
| Blank | PT |
| G | G |
| T | NPT |

## Product feature

1. Manual operation, smooth actuation, and exact and reliable orientation.
2. Sliding column structure has good tightness and light weight and is easy to install and dismount.
3. Internal hole adopts special processing technology which has little attrition friction, long service life.
4. No need to add oil for lubrication.
5. Panel-mounting makes it convenient to install and apply.

## Flow chart

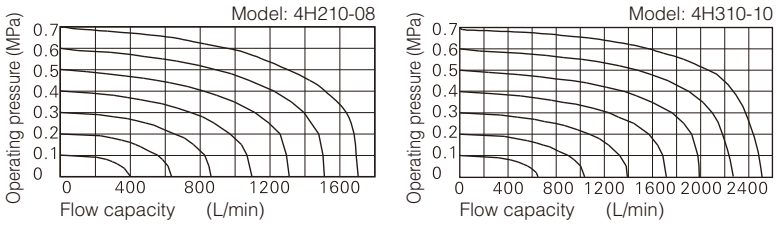


## Inner structure

**4H210**

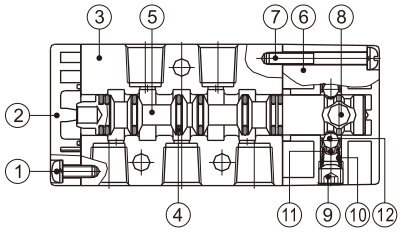


**4HA230C**

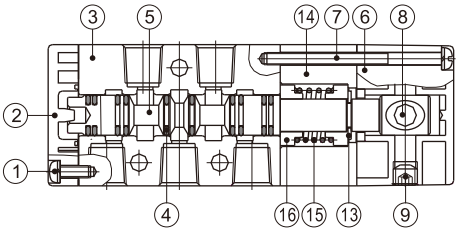


| No. | Item | No. | Item |
|---|---|---|---|
| 1 | Round head screw | 9 | Stop screw |
| 2 | Bottom cover | 10 | Spring |
| 3 | Body | 11 | Steel ball jacket |
| 4 | O-ring | 12 | Steel ball |
| 5 | Spool | 13 | E clip |
| 6 | Top cover | 14 | Side cover |
| 7 | Round head cover | 15 | Spring |
| 8 | Axle | 16 | Spring holder |

## Installation

1. 5/3 way manual return hand lever valve is positioned by steel ball, which is convenient to switch. Please applythe proper force to avoid the position mismatch and misoperation.
2. When installed by panel, disassemble the gasket according to the practical requirement.
3. Below is the installation method for reference.
   Note: Please give your attention on the panel thickness and hole dimension when installed by panel.

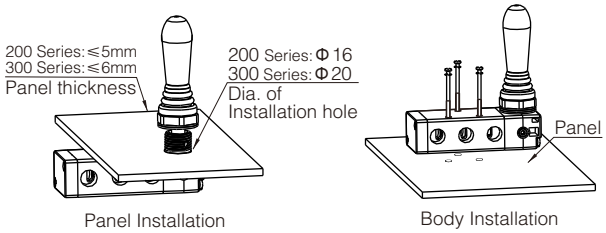

## Dimensions

**4H210\310、4HA210\310**

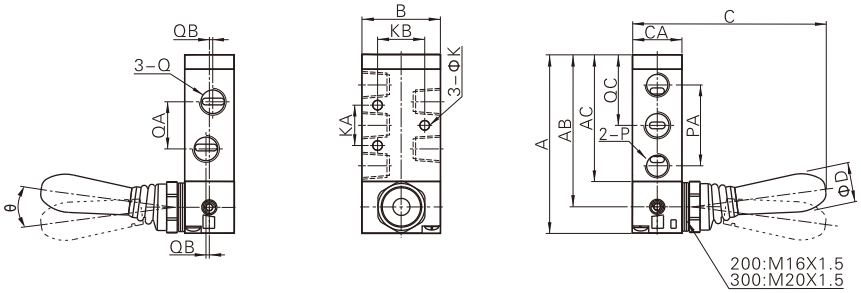


| Model\Item | A | AB | AC | B | C | CA | D | K | KA | KB | P | PA | Q | QA | QB | QC | Θ |
|---|---|---|---|---|---|---|---|---|---|---|---|---|---|---|---|---|---|
| 4H210-06 | 81.5 | 69.5 | 57.5 | 35 | 90 | 22 | 18 | 4.3 | 20 | 23.5 | PT1/8 | 36 | PT1/8 | 18 | - | 32.5 | 15 |
| 4HA210-06 | | | | | | | | | | | | | | | | | |
| 4H210-08 | 81.5 | 69.5 | 57.5 | 35 | 90 | 22 | 18 | 4.3 | 20 | 23.5 | PT1/8 | 36 | PT1/4 | 21 | 1.5 | 32.5 | 15 |
| 4HA210-08 | | | | | | | | | | | | | | | | | |
| 4H310-08 | 101 | 87 | 73 | 40 | 93.5 | 27 | 18 | 4.3 | 24 | 27.5 | PT1/4 | 45 | PT1/4 | 22 | - | 40.5 | 18 |
| 4HA310-08 | | | | | | | | | | | | | | | | | |
| 4H310-10 | 101 | 87 | 73 | 40 | 93.5 | 27 | 18 | 4.3 | 24 | 27.5 | PT1/4 | 45 | PT3/8 | 24 | 2 | 40.5 | 18 |
| 4HA310-10 | | | | | | | | | | | | | | | | | |

**4H230、4H330**

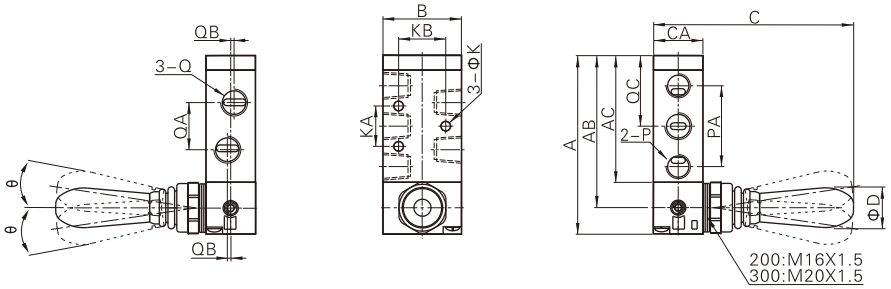


| Model\Item | A | AB | AC | B | C | CA | D | K | KA | KB | P | PA | Q | QA | QB | QC | Θ |
|---|---|---|---|---|---|---|---|---|---|---|---|---|---|---|---|---|---|
| 4H230C-06 | 81.5 | 69.5 | 57.5 | 35 | 90.5 | 22 | 18 | 4.3 | 20 | 23.5 | PT1/8 | 36 | PT1/8 | 18 | - | 32.5 | 8.5 |
| 4H230E-06 | | | | | | | | | | | | | | | | | |
| 4H230C-08 | 81.5 | 69.5 | 57.5 | 35 | 90.5 | 22 | 18 | 4.3 | 20 | 23.5 | PT1/8 | 36 | PT1/4 | 21 | 1.5 | 32.5 | 8.5 |
| 4H230E-08 | | | | | | | | | | | | | | | | | |
| 4H330C-08 | 101 | 87 | 73 | 40 | 94 | 27 | 18 | 4.3 | 24 | 27.5 | PT1/4 | 45 | PT1/4 | 22 | - | 40.5 | 10 |
| 4H330E-08 | | | | | | | | | | | | | | | | | |
| 4H330C-10 | 101 | 87 | 73 | 40 | 94 | 27 | 18 | 4.3 | 24 | 27.5 | PT1/4 | 45 | PT3/8 | 24 | 2 | 40.5 | 10 |
| 4H330E-10 | | | | | | | | | | | | | | | | | |

**4HA230、4HA330**

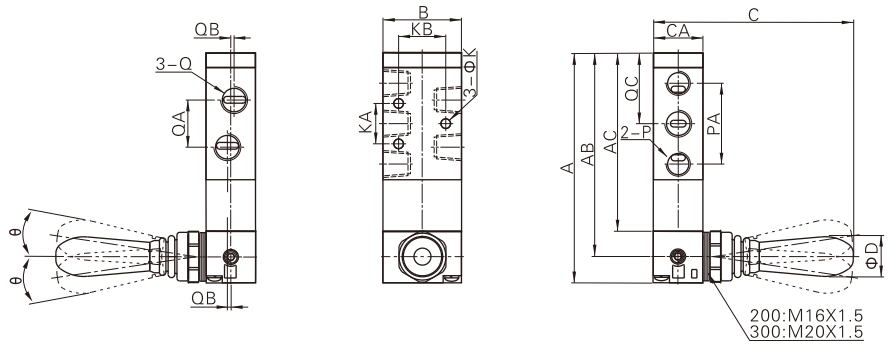


| Model\Item | A | AB | AC | B | C | CA | D | K | KA | KB | P | PA | Q | QA | QB | QC | Θ |
|---|---|---|---|---|---|---|---|---|---|---|---|---|---|---|---|---|---|
| 4HA230C-06 | 100.5 | 88.5 | 76.5 | 35 | 90.5 | 22 | 18 | 4.3 | 20 | 23.5 | PT1/8 | 36 | PT1/8 | 18 | - | 32.5 | 8.5 |
| 4HA230E-06 | | | | | | | | | | | | | | | | | |
| 4HA230C-08 | 100.5 | 88.5 | 76.5 | 35 | 90.5 | 22 | 18 | 4.3 | 20 | 23.5 | PT1/8 | 36 | PT1/4 | 21 | 1.5 | 32.5 | 8.5 |
| 4HA230E-08 | | | | | | | | | | | | | | | | | |
| 4HA330C-08 | 120 | 106 | 92 | 40 | 94 | 27 | 18 | 4.3 | 24 | 27.5 | PT1/4 | 45 | PT1/4 | 22 | - | 40.5 | 10 |
| 4HA330E-08 | | | | | | | | | | | | | | | | | |
| 4HA330C-10 | 120 | 106 | 92 | 40 | 94 | 27 | 18 | 4.3 | 24 | 27.5 | PT1/4 | 45 | PT3/8 | 24 | 2 | 40.5 | 10 |
| 4HA330E-10 | | | | | | | | | | | | | | | | | |



## Specification

| Model | TSV86522 | TSV98322 |
|---|---|---|
| Fluid | Air(to be filtered by 40 μm filter element) | |
| Operating | Manual control direct acting tupe | |
| Port size ① | G1/4 | |
| Orifice size | 18mm²(Cv=1.00) | |
| Valve type | 5/2 Way | 3/2 Way |
| Lubrication ② | Not required | |
| Pressure range | 0~1.0MPa(0~145psi) | |
| Proof pressure | 1.5MPa(215psi) | |
| Temperature | -20~70℃ | |
| Material body | Aluminum alloy | |

① PT thread, G thread and NPT thread are available.
② Once lubricated air is used, continue with same medium to optimise valve life span. It is suggested to use ISO VG32 or the oil with the same grade.

## Symbol

TSV86522

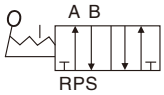


TSV98322

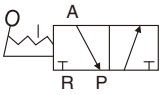


## Ordering code

**TSV86** — **52** — **08** — **M**

| Model | |
|---|---|
| TSV86 | |
| TSV98 | |

| Valve type | |
|---|---|
| 52 | 5/2 Way |
| 32 | 3/2 Way |

| Port size | |
|---|---|
| 1 | G1/8 |
| 2 | G1/4 |

| Code | |
|---|---|
| M | Mechanical locking type |
| S | Spring automatic reset type |

## Dimensions

**TSV86522**

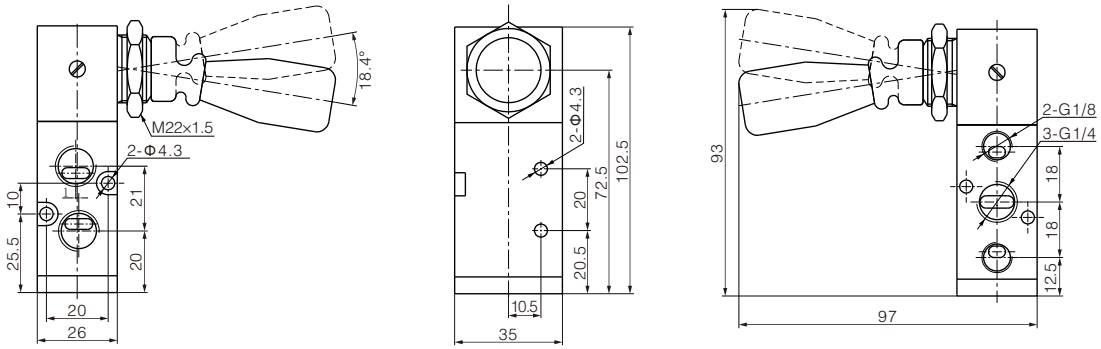


**TVS98322**

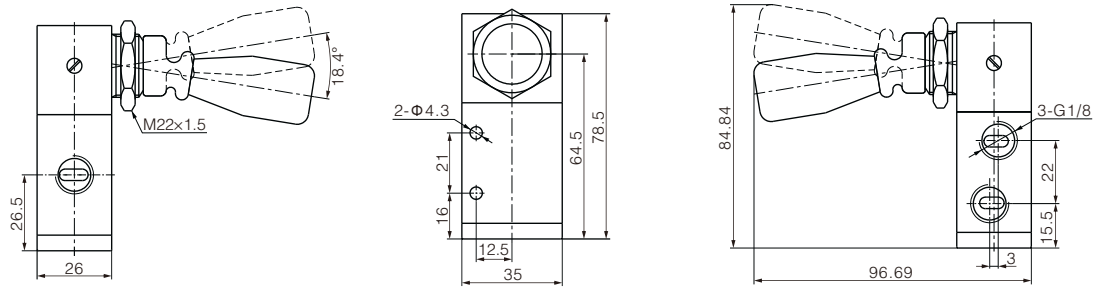



## Specification

| Model | 3R110-06 | 3R210-06 | 3R210-08 | 3R310-08 | 3R310-10 |
|---|---|---|---|---|---|
| Fluid | Air (to be filtered by 40 μm filter element) | | | | |
| Operating | Manual control direct acting type | | | | |
| Port size ① | PT1/8 | | PT1/4 | | PT3/8 |
| Orifice size | 12.0mm² (Cv=0.67) | 14.0mm² (Cv=0.78) | 16.0mm² (Cv=0.89) | 25.0mm² (Cv=1.39) | 30.0mm² (Cv=1.67) |
| Valve type | 3/2 Way | | | | |
| Lubrication ② | Not required | | | | |
| Pressure range | 0~1.0MPa(0~145psi) | | | | |
| Proof pressure | 1.5MPa(215psi) | | | | |
| Temperature | -20~70℃ | | | | |
| Material body | Aluminum alloy | | | | |

① PT thread, G thread and NPT thread are available.
② Once lubricated air is used, continue with same medium to optimise valve life span. It is suggested to use ISO VG32 lubricant or the oil with the same grade.

## Symbol




## Inner structure

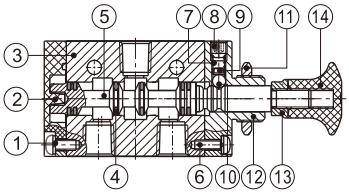


| No. | Item | No. | Item | No. | Item |
|---|---|---|---|---|---|
| 1 | Round head screw | 6 | Round head cover | 11 | Hexagon nut |
| 2 | Bottom cover | 7 | Spring | 12 | Top cover |
| 3 | Body | 8 | Stop screw | 13 | Safety nut |
| 4 | O-ring | 9 | Spring base | 14 | Hand grip |
| 5 | Spool | 10 | Steel ball | | |

## Ordering code

**3R** — **Model**

| | |
|---|---|
| 3R | 3 port 2 position push-pull valve |

**2** — **Code**

| | |
|---|---|
| 1 | 100 Series |
| 2 | 200 Series |
| 3 | 300 Series |

**10** — **Valve type**

| | |
|---|---|
| 10 | 2 position |

**08** — **Port size**

| Code | Port size |
|---|---|
| 100 Series | 06 1/8" |
| 200 Series | 06 1/8" |
| | 08 1/4" |
| 300 Series | 08 1/4" |
| | 10 3/8" |

□ — **Thread type**

| | |
|---|---|
| Blank | PT |
| G | G |
| T | NPT |

## Flow chart

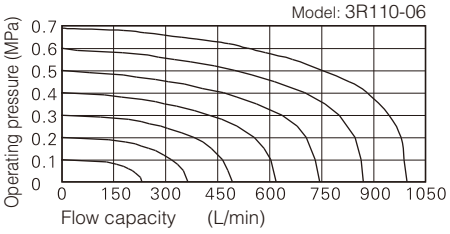


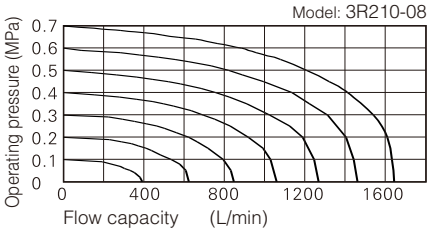


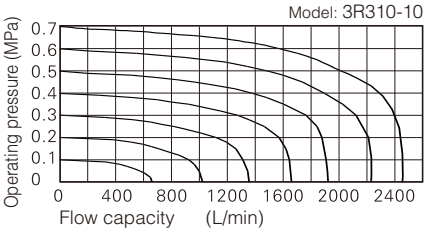


## Dimensions

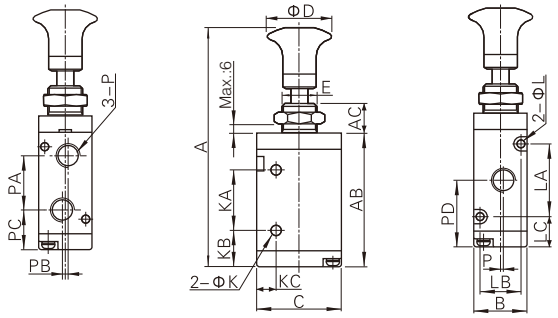


| Model\Item | A | AB | AC | B | C | D | E | K | KA | KB | KC | L | LA | LB | LC | P | PA | PB | PC | PD | PE |
|---|---|---|---|---|---|---|---|---|---|---|---|---|---|---|---|---|---|---|---|---|---|
| 3R110-06 | 87 | 47.8 | 10 | 18 | 27 | 25 | M12×0.75 | 3.1 | 21 | 13 | 7.7 | 3.3 | 19 | 13 | 14 | PT1/8 | 16 | 2 | 15.5 | 24.5 | 1 |
| 3R210-06 | 98 | 57.8 | 10 | 22 | 35 | 25 | M14×1.0 | 4.3 | 25 | 16 | 8 | 3.3 | 30 | 17 | 13.5 | PT1/8 | 22.5 | 0 | 17.5 | 28.5 | 0 |
| 3R210-08 | 98 | 57.8 | 10 | 22 | 35 | 25 | M14×1.0 | 4.3 | 25 | 16 | 8 | 3.3 | 30 | 17 | 13.5 | PT1/4 | 22.5 | 0 | 17.5 | 28.5 | 1.5 |
| 3R310-08 | 106.5 | 66.5 | 10 | 27 | 40 | 25 | M16×1.0 | 4.3 | 30 | 18 | 10 | 4.3 | 35 | 20 | 15.5 | PT1/4 | 24 | 0 | 21 | 33 | 0 |
| 3R310-10 | 106.5 | 66.5 | 10 | 27 | 40 | 25 | M16×1.0 | 4.3 | 30 | 18 | 10 | 4.3 | 35 | 20 | 15.5 | PT3/8 | 24 | 0 | 21 | 33 | 2 |



## Specifications

| Model | 4R110-06 | 4R210-06 | 4R210-08 | 4R310-08 | 4R310-10 |
|---|---|---|---|---|---|
| Fluid | Air (to be filtered by 40 μm filter element) | | | | |
| Operating | Manual control direct acting tupe | | | | |
| Port size ① | PT1/8 | | PT1/4 | | PT3/8 |
| Orifice size | 12.0mm² (Cv=0.67) | 14.0mm² (Cv=0.78) | 16.0mm² (Cv=0.89) | 25.0mm² (Cv=1.39) | 30.0mm² (Cv=1.67) |
| Valve type | 5/2 Way | | | | |
| Lubrication ② | Not required | | | | |
| Pressure range | 0~1.0MPa(0~145psi) | | | | |
| Proof pressure | 1.5MPa(215psi) | | | | |
| Temperature | -20~70℃ | | | | |
| Material body | Aluminum alloy | | | | |

① PT thread, G thread and NPT thread are available;
② Once lubricated air is used, continue with same medium to optimise valve life span. It is suggested to use ISO Vg32 lubricant or the oil with the same grade.

## Symbol




## Ordering code

**4R** | **2** | **10** | **08** | □

**Model**

| | |
|---|---|
| 4R | 5 port 2 position push-pull valve |

**Code**

| | |
|---|---|
| 1 | 100 Series |
| 2 | 200 Series |
| 3 | 300 Series |

**Valve type**

| | |
|---|---|
| 10 | 2 position |

**Port size**

| Code | Port size | |
|---|---|---|
| 100 Series | 06 | 1/8" |
| 200 Series | 06 | 1/8" |
| | 08 | 1/4" |
| 300 Series | 08 | 1/4" |
| | 10 | 3/8" |

**Thread type**

| | |
|---|---|
| Blank | PT |
| G | G |
| T | NPT |

## Inner structure

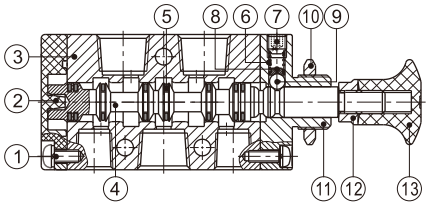


| No. | Item | No. | Item | No. | Item |
|---|---|---|---|---|---|
| 1 | Round head screw | 6 | Spring | 11 | Top cover |
| 2 | Bottom cover | 7 | Stop screw | 12 | Safety nut |
| 3 | Body | 8 | Spring base | 13 | Hand grip |
| 4 | Spool | 9 | Steel ball | 14 | |
| 5 | O-ring | 10 | Hexagon nut | | |

## Flow chart

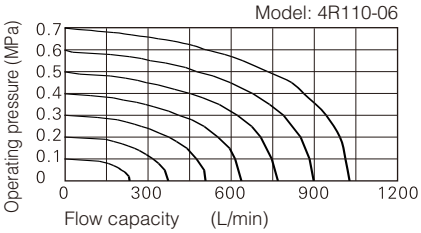


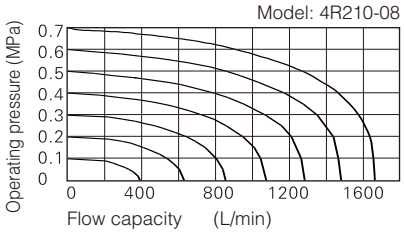


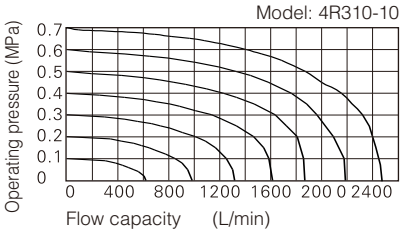


## Dimensions

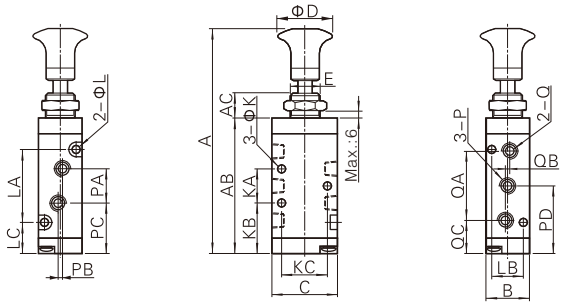


| Model\Item | A | AB | AC | B | C | D | E | K | KA | KB | KC | L | LA | LB | LC | P | PA | PB | PC | PD | Q | QA | QB | QC |
|---|---|---|---|---|---|---|---|---|---|---|---|---|---|---|---|---|---|---|---|---|---|---|---|---|
| 4R110-06 | 98 | 58.8 | 10 | 18 | 27 | 25 | M12×0.75 | 3.3 | 14 | 22 | 19 | 3.3 | 30 | 13 | 14 | PT1/8 | 16 | 3 | 21 | 29 | PT1/8 | 28 | 2 | 15 |
| 4R210-06 | 106 | 65.8 | 10 | 22 | 35 | 25 | M14×1 | 4.3 | 20 | 22.5 | 23.5 | 3.3 | 38 | 17 | 13.5 | PT1/8 | 18 | 0 | 23.5 | 32.5 | PT1/8 | 36 | 0 | 14.5 |
| 4R210-08 | 106 | 65.8 | 10 | 22 | 35 | 25 | M14×1 | 4.3 | 20 | 22.5 | 23.5 | 3.3 | 38 | 17 | 13.5 | PT1/8 | 21 | 3 | 22 | 32.5 | PT1/4 | 36 | 0 | 14.5 |
| 4R310-08 | 121.5 | 81 | 10 | 27 | 40 | 25 | M16×1 | 4.3 | 24 | 28.5 | 27.5 | 4.3 | 50 | 20 | 15.5 | PT1/4 | 22 | 0 | 29.5 | 40.5 | PT1/4 | 45 | 0 | 18 |
| 4R310-10 | 121.5 | 81 | 10 | 27 | 40 | 25 | M16×1 | 4.3 | 24 | 28.5 | 27.5 | 4.3 | 50 | 20 | 15.5 | PT1/4 | 24 | 4 | 28.5 | 40.5 | PT3/8 | 45 | 0 | 18 |



## Specification

| Model | HSV06 | HSV08 | HSV10 | HSV15 | HSV20 | HSV25 |
|---|---|---|---|---|---|---|
| Fluid | Air (to be filtered by 40 μm filter element) | | | | | |
| Operating | Manual control direct acting type | | | | | |
| Port size ① | PT1/8 | PT1/4 | PT3/8 | PT1/2 | PT3/4 | PT1 |
| Orifice size | 23.0mm² (Cv=1.28) | 40.0mm² (Cv=2.20) | 62.0mm² (Cv=3.50) | 140.0mm² (Cv=7.80) | 250.0mm² (Cv=13.80) | 392.0mm² (Cv=21.78) |
| Valve type | 3/2 Way | | | | | |
| Lubrication | Not required | | | | | |
| Pressure range | 0~1.0MPa(0~145psi) | | | | | |
| Proof pressure | 1.5MPa(215psi) | | | | | |
| Temperature | -20~70℃ | | | | | |
| Material body | Aluminum alloy | | | | | |

① PT thread, G thread and NPT thread are available.

## Symbol




## Flow chart

1. There are several ways of internal thread connection, suitable for the application in different pipeline systems.
2. The direction-change slides smoothly and has good hand feeling.
3. There is large effective circulating area.
4. The valve spool surface is treated with acid washing passivation, and the surface of valve body is oxidized to keep the color for a long time.

## Ordering code

**HSV** — Model

| | |
|---|---|
| HSV | Hand slide valve |

**08** — Port size

| | |
|---|---|
| 06 | 1/8" |
| 08 | 1/4" |
| 10 | 3/8" |
| 15 | 1/2" |
| 20 | 3/4" |
| 25 | 1" |

**SS** — Dovt thread

| | |
|---|---|
| Blank | Standard |
| SS | Double male thread |
| FF | Double female thread |
| SF | Male and female thread |

□ — Thread type

| | |
|---|---|
| Blank | PT |
| G | G |
| T | NPT |

## Inner structure

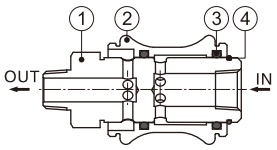


| No. | Item |
|---|---|
| 1 | Valve plug |
| 2 | Body |
| 3 | O-ring |
| 4 | Clip |

## Dimensions

Standard

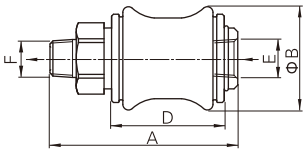


Double female thread(FF)

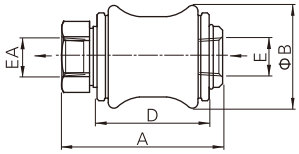


Male and female thread(SF)

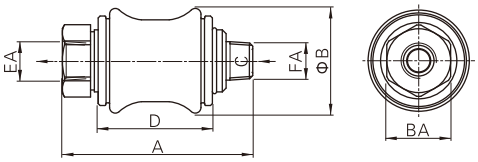


Double male thread(SS)

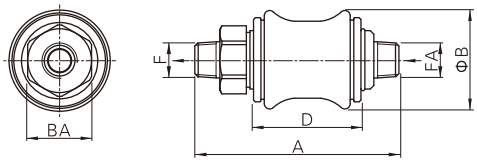


| Model\Item | A | | | | B | BA | D | E | EA | F | FA |
|---|---|---|---|---|---|---|---|---|---|---|---|
| | Standard | Double female thread | Male and female thread | Double male thread | | | | | | | |
| HSV06 | 50 | 43 | 50 | 57 | 27.5 | 17 | 30 | PT1/8 | PT1/8 | PT1/8 | PT1/8 |
| HSV08 | 58 | 47 | 58 | 69 | 30 | 19 | 32.5 | PT1/4 | PT1/4 | PT1/4 | PT1/4 |
| HSV10 | 68.5 | 55.5 | 68.5 | 81.5 | 35.5 | 22 | 39 | PT3/8 | PT3/8 | PT3/8 | PT3/8 |
| HSV15 | 85.5 | 70.5 | 85.5 | 100.5 | 44 | 30 | 50 | PT1/2 | PT1/2 | PT1/2 | PT1/2 |
| HSV20 | 96.5 | 79.5 | 96.5 | 113.5 | 53.5 | 36 | 58 | PT3/4 | PT3/4 | PT3/4 | PT3/4 |
| HSV25 | 114.5 | 96.5 | 114.5 | 132.5 | 65.5 | 44 | 70 | PT1 | PT1 | PT1 | PT1 |



## Specification

| Model | 4HV2□□ -06(L) | 4HV2□□ -08(L) | 4HV3□□ -08(L) | 4HV3□□ -10(L) | 4HV4□□ -15(L) | 4HV4□□ -20(L) |
|---|---|---|---|---|---|---|
| Fluid | Air (to be filtered by 40 μm filter element) | | | | | |
| Operating | Manual control direct acting tupe | | | | | |
| Port size ① | PT1/8 | PT1/4 | PT1/4 | PT3/8 | PT1/2 | PT3/4 |
| Orifice size | 14.0mm² (Cv=0.78) | 16.0mm² (Cv=0.89) | 30.0mm² (Cv=1.67) | 33.0mm² (Cv=1.83) | 88.0mm² (Cv=4.89) | 95.0mm² (Cv=5.27) |
| Valve type | 4/2 Way, 4/3 Way | | | | | |
| Lubrication | Not required | | | | | |
| Pressure range | 0~1.0MPa(0~145psi) | | | | | |
| Proof pressure | 1.5MPa(215psi) | | | | | |
| Temperature | -20~70℃ | | | | | |
| Operating angle | 90° (4/3 Way: 45° ) | | | | | |

① PT thread, G thread and NPT thread are available.

## Symbol

4/2 way

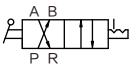


4/2 way with lock

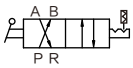


4/3 way closed center

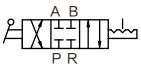


4/3 way closed center type with lock

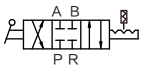


## Product feature

1. The direction-change turns lightly with good hand feeling and exact orientation.
2. Large effective circulating area leads to little pressure loss.
3. Panel and body installation are optional, The panel installation can be attached with installing nut.

## Ordering code

| 4HV | 2 | 30 | 06 | S | L | □ |
|---|---|---|---|---|---|---|
| Model | Code | Valve type | Port size | Installation | Note | Thread type |

**Model**

| | |
|---|---|
| 4HV | Hand lever valve |

**Code**

| | |
|---|---|
| 2 | 200 Series |
| 3 | 300 Series |
| 4 | 400 Series |

**Valve type**

| | |
|---|---|
| 10 | 4 port 2 position |
| 30 | 4 port 3 position ① |

**Port size**

| Code | Port size | |
|---|---|---|
| 200 Series | 06 | 1/8" |
| | 08 | 1/4" |
| 300 Series | 08 | 1/4" |
| | 10 | 3/8" |
| 400 Series | 15 | 1/2" |
| | 20 | 3/4" |

**Installation**

| | |
|---|---|
| Blank | Body installation |
| S | Panel installation ② |

**Note**

| | |
|---|---|
| Blank | Without lock |
| L | With lock |

**Thread type**

| | |
|---|---|
| Blank | PT |
| G | G |
| T | NPT |

① 4 port 3 position only has closed center type.
② The panel installation can be attached with installing nut.

## Flow chart

Model: 2 Series

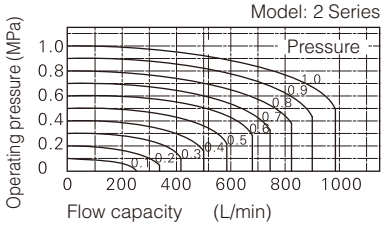


Model: 3 Series

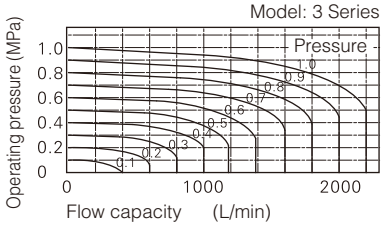


Model: 4 Series

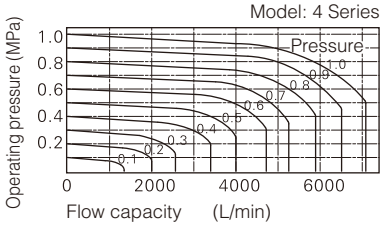


## Inner structure

4HVL

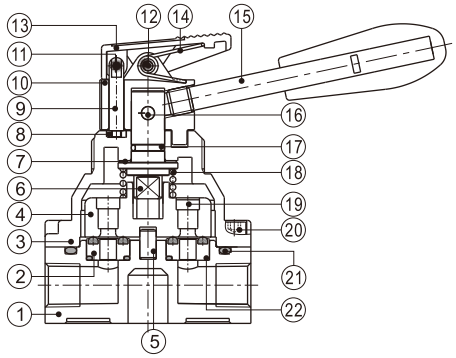


| No. | Item | No. | Item | No. | Item |
|---|---|---|---|---|---|
| 1 | Bogy | 9 | Lock pin | 17 | Shaft O-ring |
| 2 | Seal base | 10 | Valve cap | 18 | Spring |
| 3 | Valve cover | 11 | Spring pin | 19 | Iron plate |
| 4 | Valve plug | 12 | Pin one | 20 | Fixing screw |
| 5 | Column pin | 13 | Front cover | 21 | Body O-ring |
| 6 | Shaft | 14 | Spring | 22 | Seal base O-ring |
| 7 | Washer | 15 | Handle | | |
| 8 | Fixing plate | 16 | Pin two | | |

## Dimensions

### 4HV

Body installtion

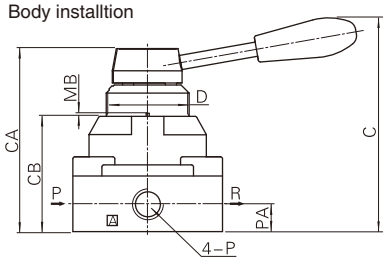


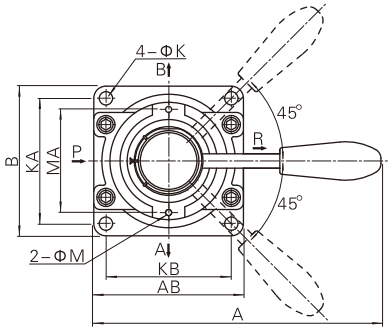


Panel installtion

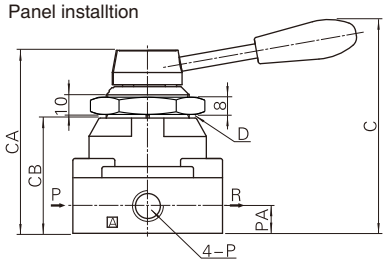


| Model\Item | A | AB | B | C | CA | CB | D | K | KA | KB | M | MA | MB | P | PA |
|---|---|---|---|---|---|---|---|---|---|---|---|---|---|---|---|
| 4HV2□□-06 | 120 | 62 | 62 | 92.5 | 73 | 45 | M34×1.5 | 5.5 | 49 | 49 | 3 | 40 | 1.5 | PT1/8 | 11.5 |
| 4HV2□□-08 | 120 | 62 | 62 | 92.5 | 73 | 45 | M34×1.5 | 5.5 | 49 | 49 | 3 | 40 | 1.5 | PT1/4 | 11.5 |
| 4HV3□□-08 | 140 | 74 | 74 | 104 | 88.5 | 56 | M40×1.5 | 6.5 | 62 | 62 | 3 | 51 | 1.5 | PT1/4 | 13.5 |
| 4HV3□□-10 | 140 | 74 | 74 | 104 | 88.5 | 56 | M40×1.5 | 6.5 | 62 | 62 | 3 | 51 | 1.5 | PT3/8 | 13.5 |
| 4HV4□□-15 | 160 | 94 | 102 | 128 | 110 | 72 | M52×1.5 | 6.5 | 89 | 81 | 3 | 64 | 2 | PT1/2 | 18 |
| 4HV4□□-20 | 160 | 94 | 102 | 128 | 110 | 72 | M52×1.5 | 6.5 | 89 | 81 | 3 | 64 | 2 | PT3/4 | 18 |

### 4HVL

Body installtion

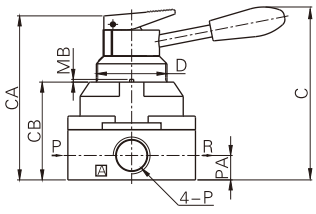


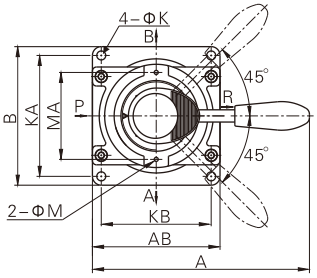


Panel installtion

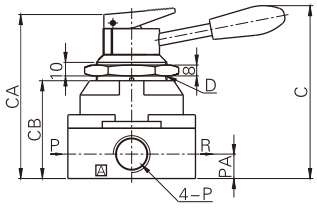


| Model\Item | A | AB | B | C | CA | CB | D | K | KA | KB | M | MA | MB | P | PA |
|---|---|---|---|---|---|---|---|---|---|---|---|---|---|---|---|
| 4HV2□□-06L | 120 | 62 | 62 | 92.5 | 84 | 45 | M34×1.5 | 5.5 | 49 | 49 | 3 | 40 | 1.5 | PT1/8 | 11.5 |
| 4HV2□□-08L | 120 | 62 | 62 | 92.5 | 84 | 45 | M34×1.5 | 5.5 | 49 | 49 | 3 | 40 | 1.5 | PT1/4 | 11.5 |
| 4HV3□□-08L | 140 | 74 | 74 | 104 | 99 | 56 | M40×1.5 | 6.5 | 62 | 62 | 3 | 51 | 1.5 | PT1/4 | 13.5 |
| 4HV3□□-10L | 140 | 74 | 74 | 104 | 99 | 56 | M40×1.5 | 6.5 | 62 | 62 | 3 | 51 | 1.5 | PT3/8 | 13.5 |
| 4HV4□□-15L | 160 | 94 | 102 | 128 | 121 | 72 | M52×1.5 | 6.5 | 89 | 81 | 3 | 64 | 2 | PT1/2 | 18 |
| 4HV4□□-20L | 160 | 94 | 102 | 128 | 121 | 72 | M52×1.5 | 6.5 | 89 | 81 | 3 | 64 | 2 | PT3/4 | 18 |

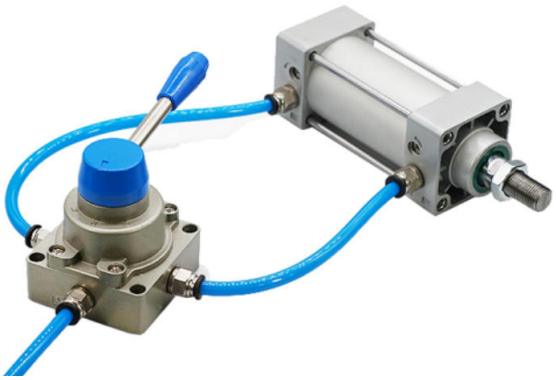

## Specifications

| Model | HV200A-02 | HV230A-02 | HV200B-02 | HV230B-02 |
|---|---|---|---|---|
| Fluid | Air (to be filtered by 40 μm filter element) | | | |
| Operating | Manual control | | | |
| Port size ① | In=Out=PT1/4 | | | |
| Pressure range | 0.15~0.8MPa(21~114psi) | | | |
| Valve type | 4/2 Way | 4/3 Way | 4/2 Way | 4/3 Way |
| Temperature | -10~60℃ | | | |
| Proof pressure | 1.5MPa(215psi) | | | |

| Model | HV300-02 | HV330-02 | HV300-03 | HV330-03 | HV300-04 | HV330-04 |
|---|---|---|---|---|---|---|
| Fluid | Air (to be filtered by 40 μm filter element) | | | | | |
| Operating | Manual control | | | | | |
| Port size ① | PT1/4 | PT1/4 | PT3/8 | PT3/8 | PT1/2 | PT1/2 |
| Pressure range | 0.15~0.8MPa(21~114psi) | | | | | |
| Valve type | 4/2 Way | 4/3 Way | 4/2 Way | 4/3 Way | 4/2 Way | 4/3 Way |
| Temperature | -10~60℃ | | | | | |
| Proof pressure | 1.5MPa(215psi) | | | | | |

## Symbol

4/2 Way

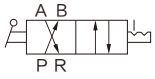


4/3 way closed center

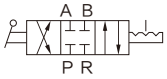


## Ordering code

| HV | 2 | 00 | A | 02 | P |
|---|---|---|---|---|---|
| Model | Code | Valve type | Function code | Port size | Handle type |

| Model | |
|---|---|
| HV | Hand lever valve |

| Code | |
|---|---|
| 2 | 200 Series |
| 3 | 300 Series |

| Valve type | |
|---|---|
| 00 | 4/2 Way |
| 30 | 4/3 Way |

| Function code | |
|---|---|
| Blank | Basic type four side interface |
| A | Bottom interface |
| B | Both sides interface |

| Port size | |
|---|---|
| 02 | PT1/4 |
| 03 | PT3/8 |
| 04 | PT1/2 |

| Handle type | |
|---|---|
| Blank | Iron handle |
| P | Plastic handle |

## Dimensions

**HV200A-02**

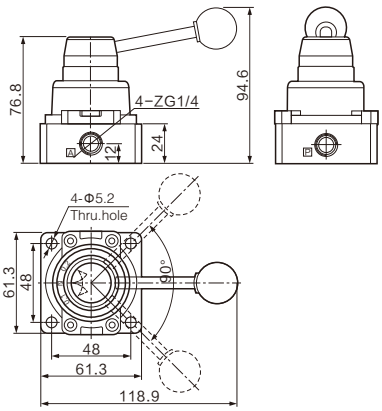


**HV200B-02**

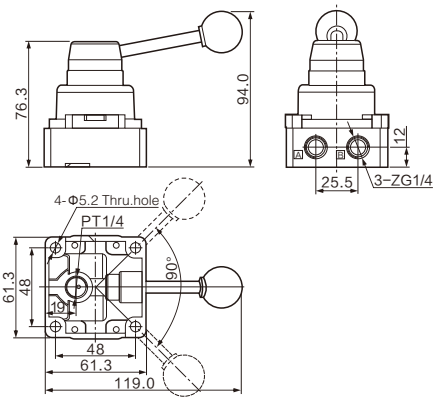


**HV300-02/03/04**
**HV330-02/03/04**

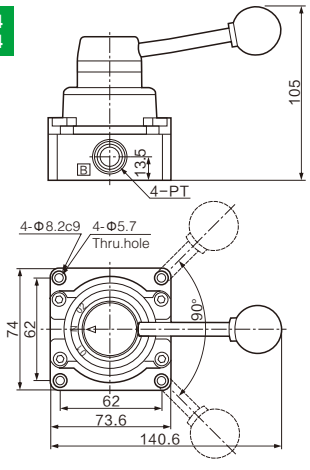


**HV300-02/03/04-P**
**HV330-02/03/04-P**

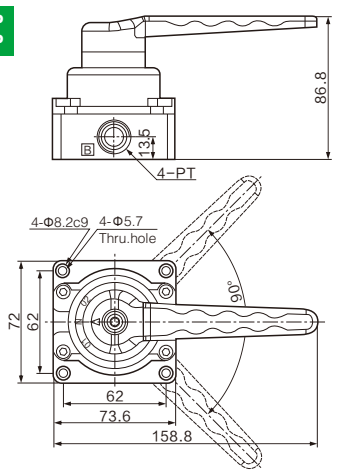



## Specification

| Model | K24R8-L8 | K34R8-L8 | K24R8-L8D | K34R8-L8D | K24R8-L8S | K34R8-L8S |
|---|---|---|---|---|---|---|
| Fluid | Air (to be filtered by 40 μm filter element) | | | | | |
| Operating | Manual control | | | | | |
| Port size | In=Out=PT1/4 | | | | | |
| Pressure range | 0.15~0.8MPa(21~114psi) | | | | | |
| Valve type | 4/2 Way | 4/3 Way | 4/2 Way | 4/3 Way | 4/2 Way | 4/3 Way |
| Temperature | -10~60℃ | | | | | |
| Proof pressure | 1.5MPa(215psi) | | | | | |

## Symbol

4/2 Way

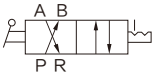


4/3 way closed center

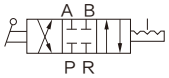


## Ordering code

**K** **24** **R8** **02** **D**

**Model**

| | |
|---|---|
| K | Hand lever valve |

**Valve type**

| | |
|---|---|
| 24 | 4/2 Way |
| 34 | 4/3 Way |

**Function code**

| | |
|---|---|
| R8 | Hand lever valve |
| L8 | Take over type |

**Port size**

| | |
|---|---|
| L8 | G1/4 |

**Take over type**

| | |
|---|---|
| Blank | Both sides interface |
| D | Bottom take over |
| S | Four side take over |

## Dimensions

**K34R6-8**

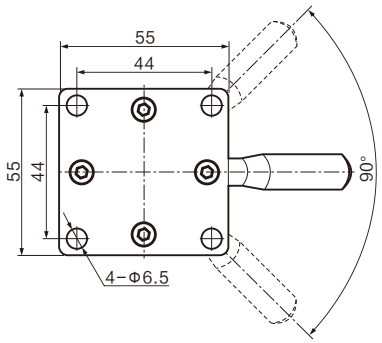


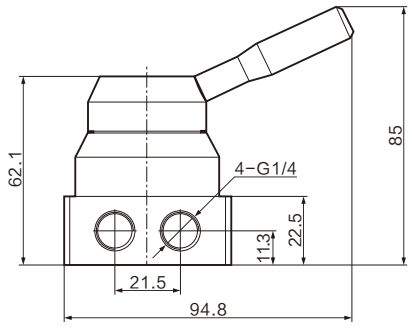


**K34R6-8D**

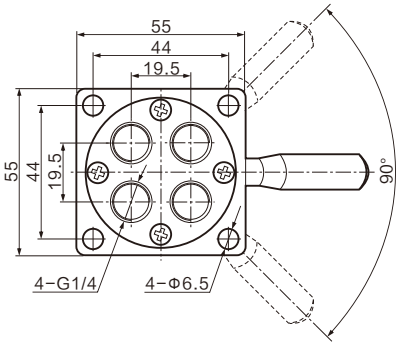


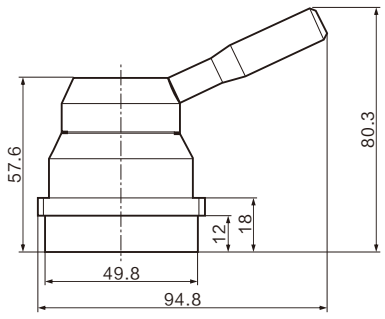


**K34R5-8S**

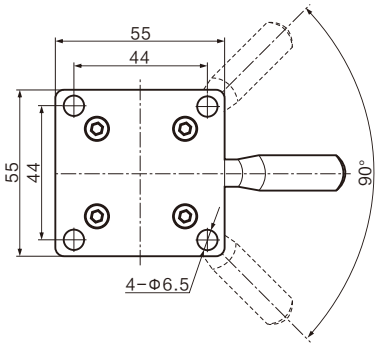


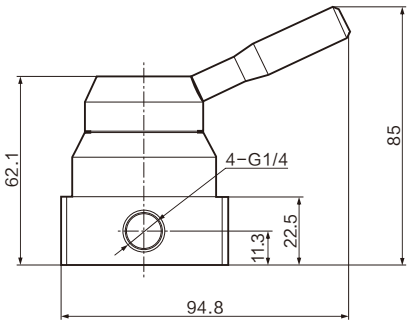



## Specifications

| Model | MOV-01 | MOV-02 | MOV-03 | MOV-04 |
|---|---|---|---|---|
| Operating fluid | Air | | | |
| Position and way no. | Two-position Three-way | | | |
| Port size | G1/8" | | | |
| Working-pressure range | 0~0.8MPa | | | |
| Operating temperature | 0~70℃ | | | |

## Ordering code

**MOV**

**Model**

| | |
|---|---|
| MOV | Mechanical valve |

**AC**

**Button type**

| | |
|---|---|
| 01 | Selective knob |
| 02 | Roller type |
| 03 | With lock button |
| 04 | Plat round button |

## Dimensions

**MOV-01**

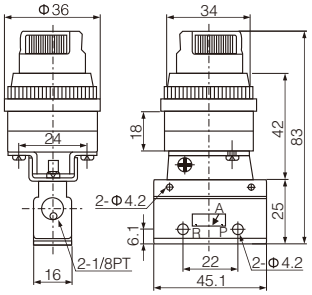


**MOV-02**

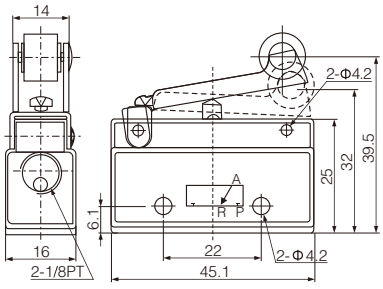


**MOV-03**

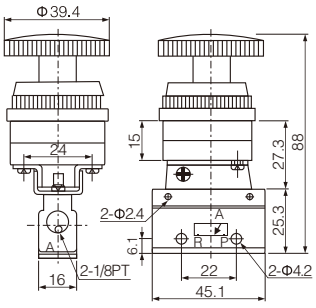


**MOV-04**

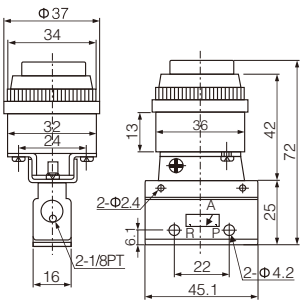


# JM Series Mechanical Valve



## Specifications

| Model | JM-05 | JM-06 | JM-06A | JM-07 |
|---|---|---|---|---|
| Working medium | 40 Micron filtered air | | | |
| Position and way no. | Two-position Three-way | | | |
| Port size | G1/4" | | | |
| Working-pressure range | 0~0.8MPa | | | |
| Operating temperature | 0~60℃ | | | |

## Ordering code

**JM**

**Model**

| | |
|---|---|
| JM | Stop-type Mechanical valve |

**05**

**Button type**

| | |
|---|---|
| 05 | Selective Knob |
| 06 | With Lock Button |
| 06A | Plat Round Button |
| 07 | Roller Type |

## Dimensions

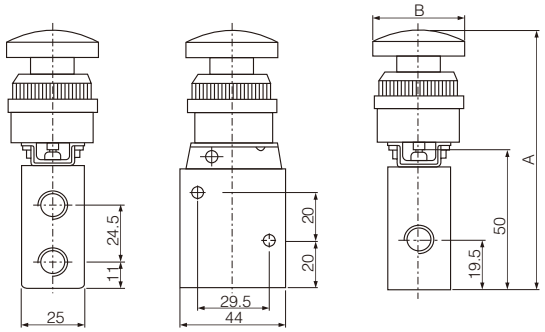


## Specifications

| Model | A | B |
|---|---|---|
| JM-05 | 114 | 36.5 |
| JM-06 | 111 | 39.5 |
| JM-06A | 96 | 39.5 |
| JM-07 | 84.5 | 42.5 |



MSV86522EB MSV86522LB MSV86522TB MSV86522PP MSV86522PPL MSV86522PB MSV86522R



MSV98322EB MSV98322LB MSV98322TB MSV98322PP MSV98322PPL MSV98322PB MSV98322R

## Ordering code

**MSV** — **Model**

| | |
|---|---|
| MSV | Mechanical valve |

**86** — **Code**

| | |
|---|---|
| 86 | 86 Series |
| 98 | 98 Series |

**32** — **Valve type**

| | |
|---|---|
| 32 | Two-position Three-way |
| 52 | Two-position Five-way |

**1** — **Port size**

| | |
|---|---|
| 1 | G1/8" |
| 2 | G1/4" |

**R** — **Button type**

| | |
|---|---|
| Blank | Basic type |
| R | Roller type |
| TB | Selective knob |
| LB | Strengthened knob |
| PB | Large round button |
| PP | Plat round button |
| PPL | Convex round button |
| EB | With lock button |

## Specifications

| Model | MSV86321 | MSV86522 | MSV96322 |
|---|---|---|---|
| Working medium | 40 Micron filtered air | | |
| Position and way number | Two-position three-way | Two-position five-way | Two-position three-way |
| Pressure range | 0~0.8MPa | 0~0.8MPa | 0~0.8MPa |
| Temperature range | 0~60℃ | | |
| Effective section area | 12mm$^2$(CV=0.67) | 16mm$^2$(CV=0.89) | 16mm$^2$(CV=0.89) |
| Port size | G1/8" | G1/4" | G1/4" |

## Dimensions

**MSV86522**

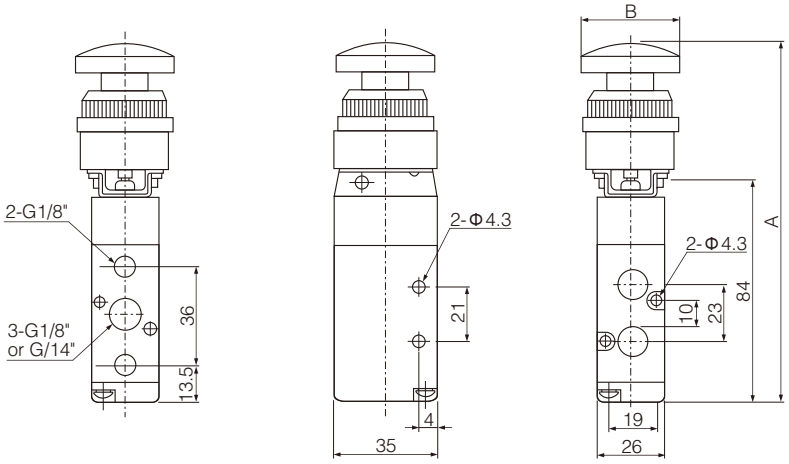


**MSV98322**

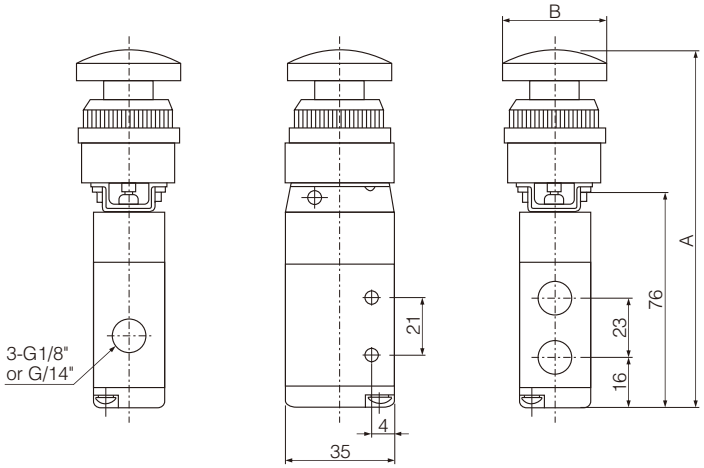


**MSV86321**

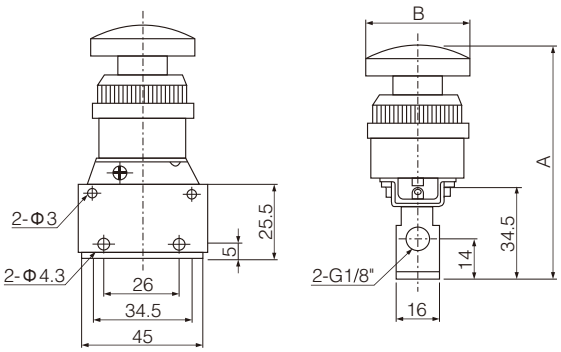


| Model | Symbol/Model | PP | PPL | LB | TB | EB | PB | R |
|---|---|---|---|---|---|---|---|---|
| MSV86522 | A | 114 | 119 | 133 | 136.5 | 134 | 131 | 107.5 |
| | B | 39.5 | 24.5 | 26.5 | 36.5 | 39.5 | 37.5 | 42.5 |
| MSV98322 | A | 106 | 111 | 125 | 129.5 | 126 | 123 | 99.5 |
| | B | 39.5 | 24.5 | 26.5 | 36.5 | 39.5 | 37.5 | 42.5 |
| MSV86321 | A | 66 | 71 | 85 | 88.5 | 86 | 83 | 59.5 |
| | B | 39.5 | 24.5 | 26.5 | 36.5 | 39.5 | 37.5 | 42.5 |

**PP**

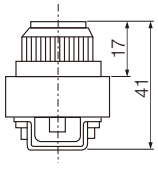


**PPL**

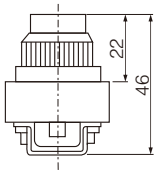


**TB**

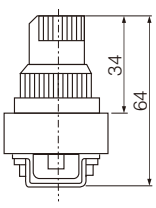


**LB**

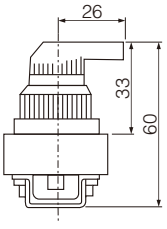


**PB**

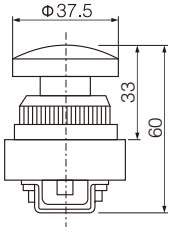


**EB**

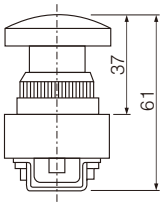


**R**

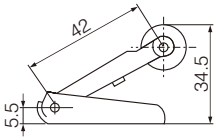



## Product explain

Manually control valve: manually controlled reversal valve used for direct control of air source signal or driving executive elements. The valve can be operated and controlled by button, hand-push, pedal and manual. It is convenient and sensitive in operation. Especially the emergency stop valve with short reversing stroke is often used in emergency operation of pneumatic units.

Machine control valve: mechanically controlled reversal valve, which will auto reset and the signal eliminated when the outside force is released. The control by outside force is realized by means of ejector rod, ejector rod roller and lever roller etc.

## Ordering code

**XQ** — **25** — **06** — **20**

**Model**

| | |
|---|---|
| XQ | Machine-control, hand-control valve |

**Valve type**

| | |
|---|---|
| 25 | Two–postition five-way |
| 23 | Two–postition three-way |

**Port size**

| | |
|---|---|
| 04 | G1/8(4mm) |
| 06 | G1/4(6mm) |

**Control type**

| | |
|---|---|
| 10 | Ejector rod type machine-control valve |
| 11 | Ejector rod roller type machine-control valve |
| 12 | Lever roller type machine-control valve |
| 13 | Can pass lever roller type machine-control valve |
| 20 | Button valve |
| 20.1 | Twinkling stop valve |
| 21 | Hand-push valve |
| 22 | Hand-draw valve |

## Specification

| Model | XQ2304□□ | XQ2504□□ | XQ2306□□ | XQ2506□□ |
|---|---|---|---|---|
| Working medium | 40 Micron filtered air | | | |
| Position and way no. | Two position three-way | Three position five-way | Two position three-way | Three position five-way |
| Joint pipe bore | Air inlet=Air outlet=PT1/8 | | Air inlet=Air outlet=PT1/4 | |
| Effective sectional area | 14mm$^2$(CV=0.78) | | 25mm$^2$(CV=1.39) | |
| The use of pressure | 0~8.0Kgf/cm$^2$ | | | |
| Ensured pressure resistance | 12.0Kgf/cm$^2$ | | | |
| Operating temperature range | -5~60℃ | | | |

## Use explain

1. Check if the elements are damaged during transportation before use and installation.
2. Pay attention to the airflow during installation, For mechanically controlled valve, please attend to the conformity between striker and valve stroke.
3. When connecting with metal pipe, first remove the foreign matters such as metal bits inside the pipe.

## Dimensions

**XQ230022**

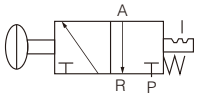


**XQ230422**

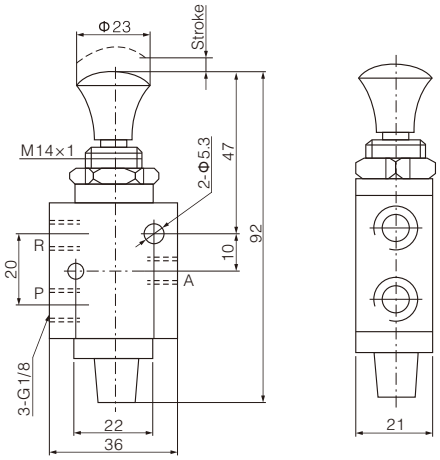


**XQ230622**

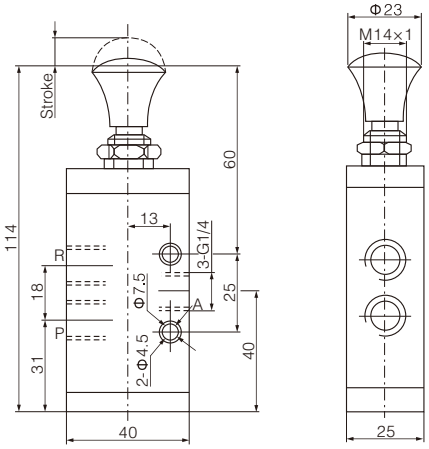


**XQ250022**

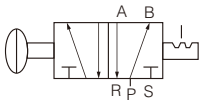


**XQ250422**

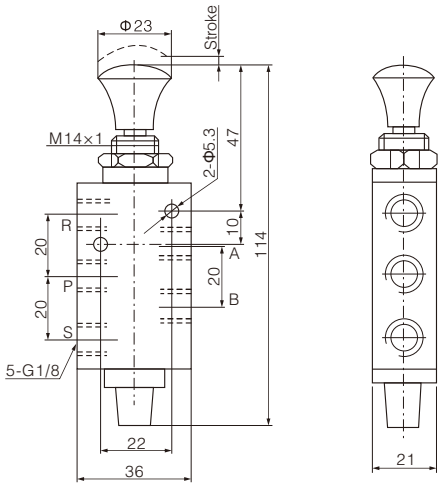


**XQ250622**

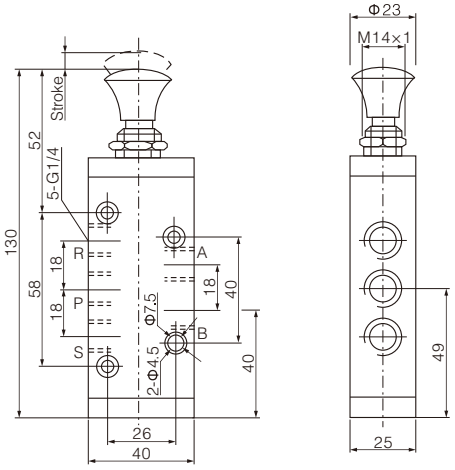


**XQ230021**

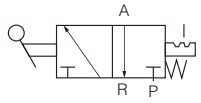


**XQ230421**

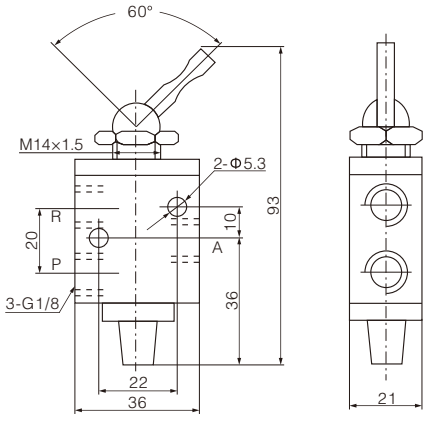


**XQ230621**

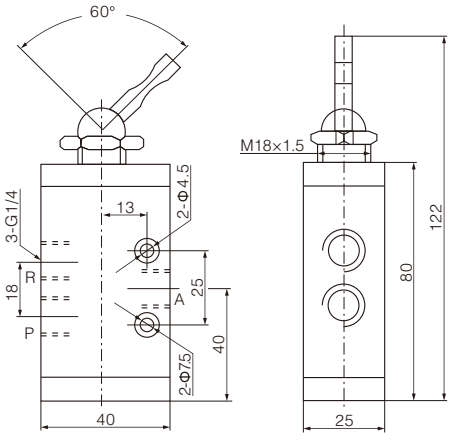

## Dimensions

**XQ250021**

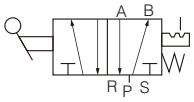


**XQ250421**

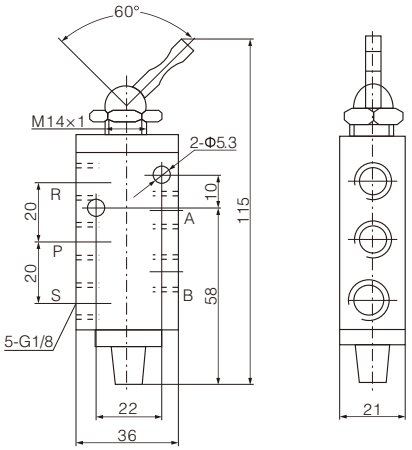


**XQ250621**

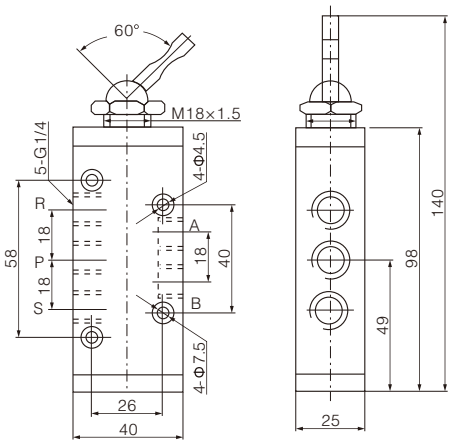


**XQ230010**

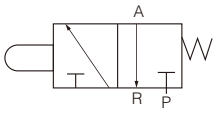


**XQ230410**

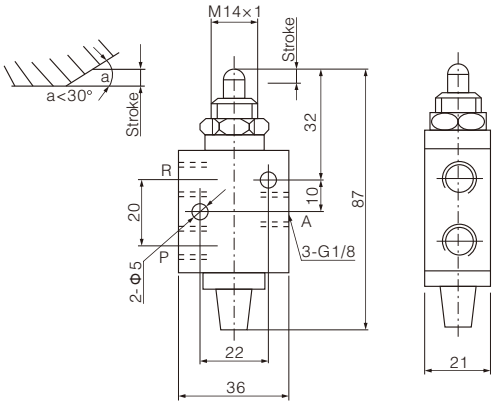


**XQ230610**

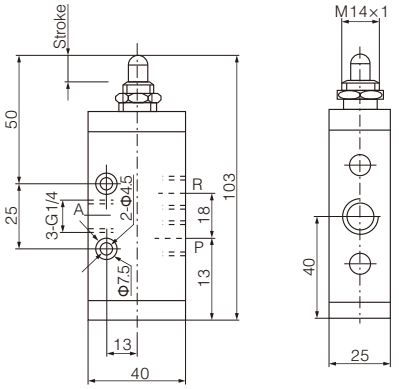


**XQ250010**

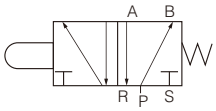


**XQ250410**

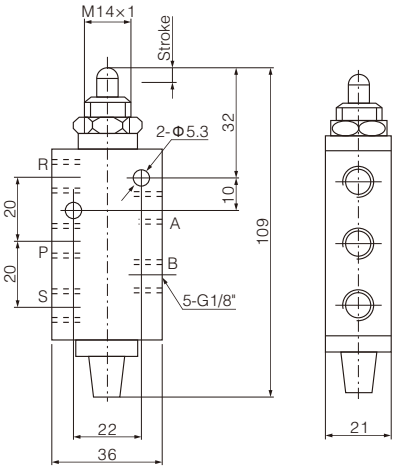


**XQ250610**

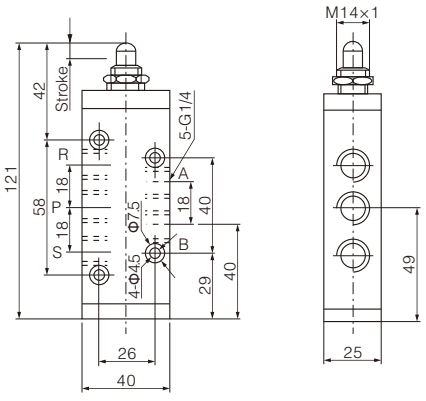

## Dimensions

**XQ230011**

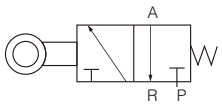


**XQ230411**

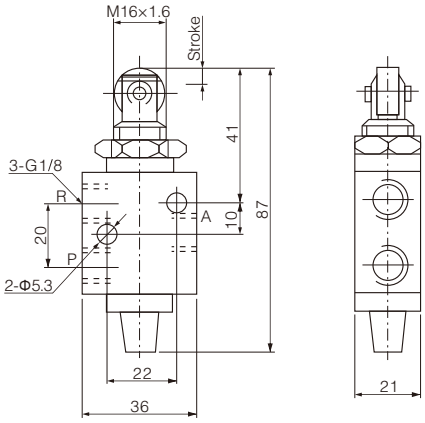


**XQ230611**

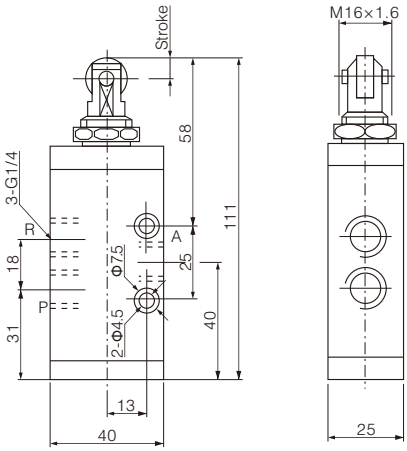


**XQ250011**

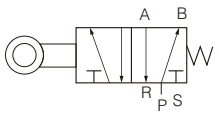


**XQ250411**

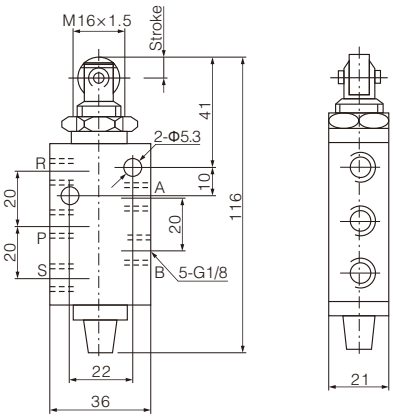


**XQ250611**

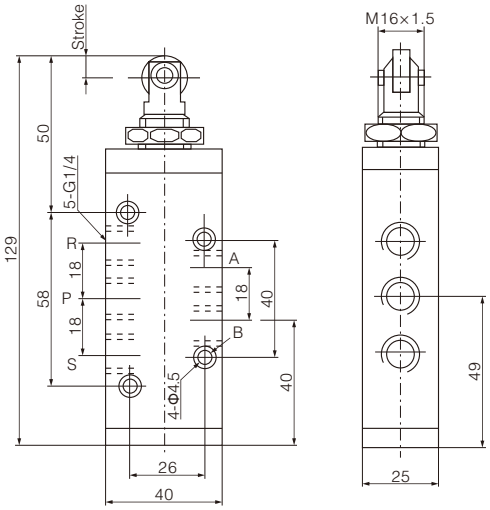


**XQ230012**

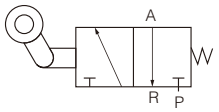


**XQ230412**

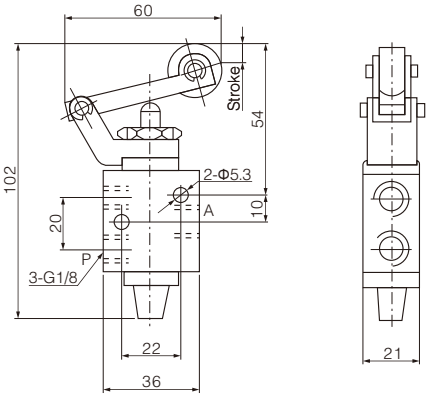


**XQ230612**

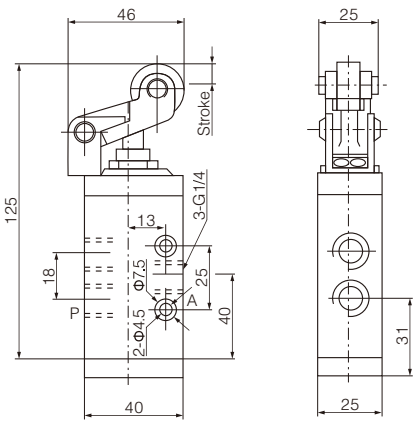

## Dimensions

**XQ250012**

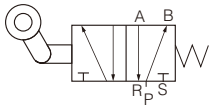


**XQ250412**

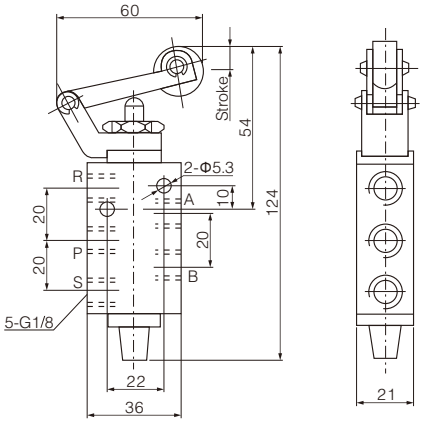


**XQ250612**

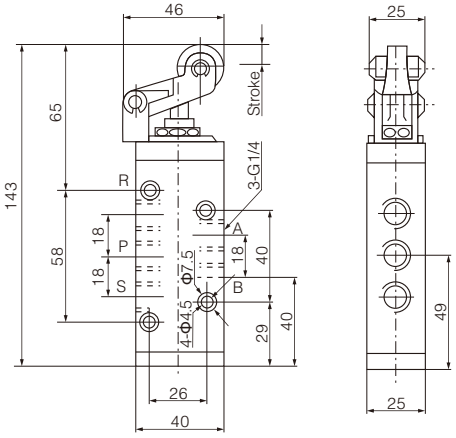


**XQ230013**

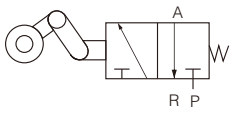


**XQ230413**

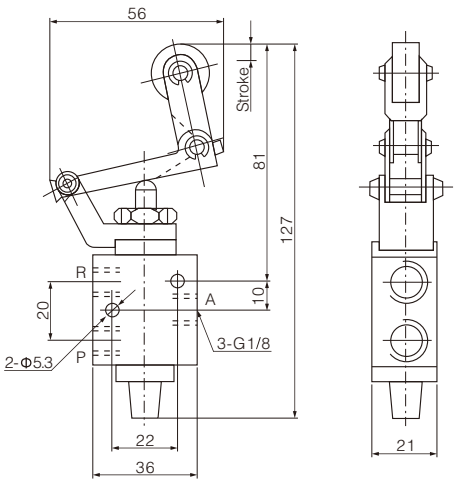


**XQ230613**

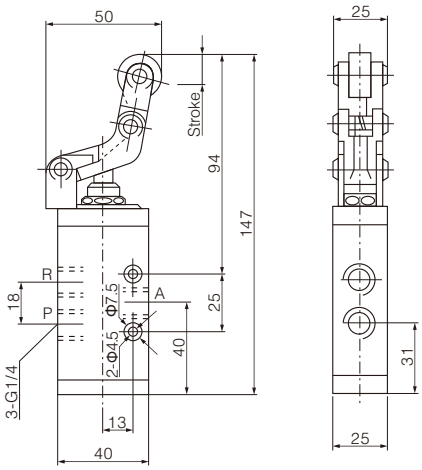


**XQ250013**

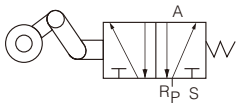


**XQ250413**

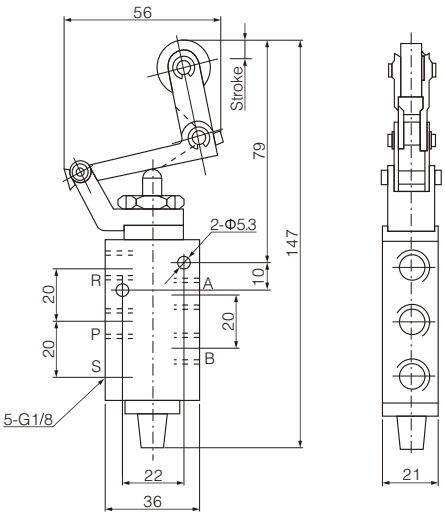


**XQ250613**

