

Symbol

No reflux valve is attached

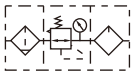

Reflux valve is attached

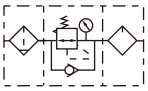

Product feature

1. Oil dripping adopts gap seal structure, which makes the adjustment of oil supply more reliable.
2. Oil feed ring can only make one full turn. The quantity of oil supply, basically taking on linear distribution. The quantity of oil supply can be generally calculated according to the position of graduation ring.
3. Filling of oil while the lubricator is under pressure ismade possible.
4. Special drip nozzle structure will produce negative pressure in oil dripping outlet and the mist flow isminimal.
5. Quick and reliable mounting clamps makes it convenient to install and use.
6. The performance of pressure adjustment is reliablewith high precision.
7. The efficiency of eliminating moisture and solid grain is high.
8. Three drain types are available: manual drain, semi-auto drain and automatic drain.

Ordering code

GC200 | 08 | M | L | □ | F | 1 | W | G | K

Model

GC200	G200 Series F.R.L unit
GC300	G300 Series F.R.L unit
GC400	G400 Series F.R.L unit
GC600	G600 Series F.R.L unit

Port size

GC200	06: 1/8"
	08: 1/4"
GC300	08: 1/4"
	10: 3/8"
	15: 1/2"
GC400	10: 3/8"
	15: 1/2"
GC600	20: 3/4"
	25: 1"

Type code

Blank	Standard
L	Lower pressure ①

Pressure gauge

Blank	Pressure gauge
N	No pressure gauge

Drain type

Drain type	Adaptable product's series
Blank: Semi-auto drain	GC200, GC300
M: Manual drain	GC400, GC600
A: Automatic drain	GC300, GC400, GC600

Pressure gauge shape

F	Square
C	Circular

Scale

1	MPa
2	psi
3	bar

Filtering grade

Blank	40μm
W	5μm

Thread type

Blank	PT
G	G
T	NPT

Code of reflux valve

Blank	No reverse flow valve is attached
K	Reverse flow valve is attached

① The maximum work pressure of lower pressure type is 0.4MPa(58Psi).

Specification

Model		GC200-06	GC200-08	GC300-08	GC300-10	GC300-15	GC400-10	GC400-15	GC600-20	GC600-25
Fluid		Air								
Port size		PT1/8	PT1/4	PT1/4	PT3/8	PT1/2	PT3/8	PT1/2	PT3/4	PT1
Filtering grade		40μm or 5μm								
Pressure range		Semi-auto and automatic drain:0.15~0.9MPa(20~130psi); Manual drain: 0.05~0.9MPa(7~130psi)								
Max. pressure		1.0MPa(145psi)								
Proof pressure		1.5MPa(215psi)								
Temperature range		-5~70℃								
Capacity of drain bowl		10CC		40CC			80CC		230CC	
Capacity of oil bowl		25CC		75CC			160CC		380CC	
Recommended lubricant		ISO VG 32 or equivalent								
Weight		580g		1300g			2360g		5550g	
Constitute	Filter	GF200-06	GF200-08	GF300-08	GF300-10	GF300-15	GF400-10	GF400-15	GF600-20	GF600-25
	Regulator	GR200-06	GR200-08	GR300-08	GR300-10	GR300-15	GR400-10	GR400-15	GR600-20	GR600-25
	Lubricator	GL200-06	GL200-08	GL300-08	GL300-10	GL300-15	GL400-10	GL400-15	GL600-20	GL600-25

① PT thread, G thread and NPT thread are available.

Inner structure

GC200

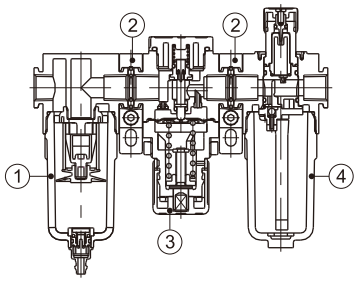

GC600

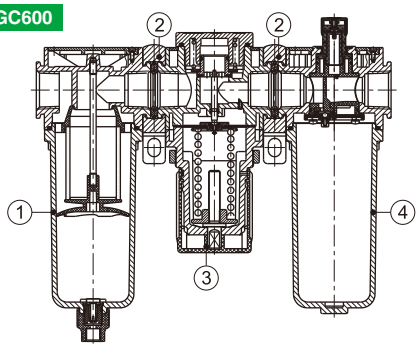

No.	Item
1	G series filter
2	Bracket
3	G series regulator
4	G series lubricator

Pressure chart

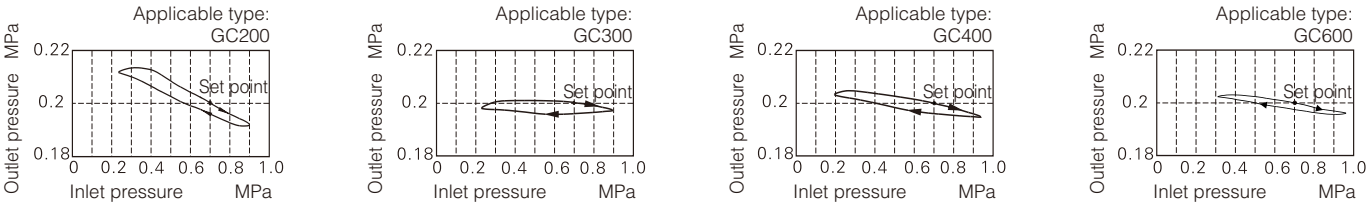

Flow chart

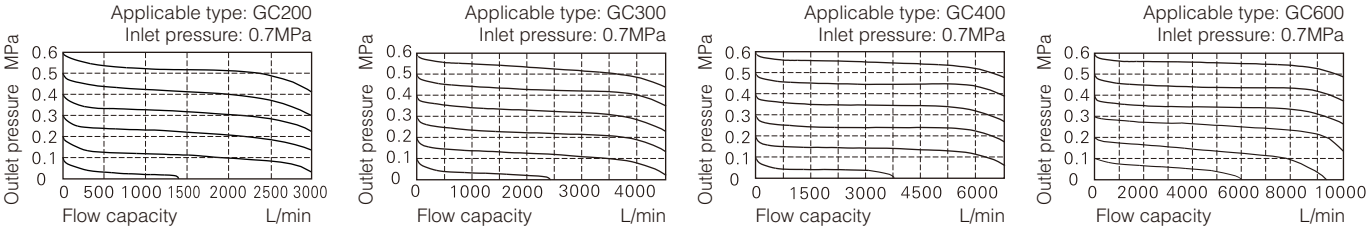

Dimensions

GC200

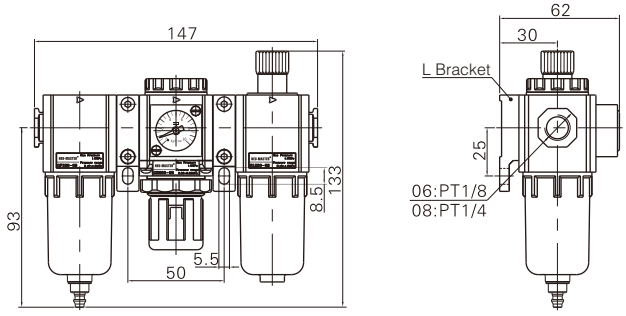

GC300\GC400

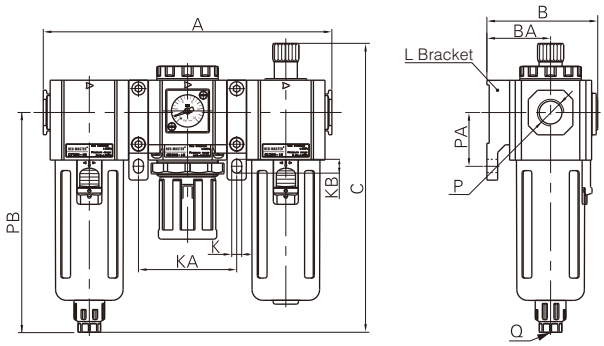

GC200

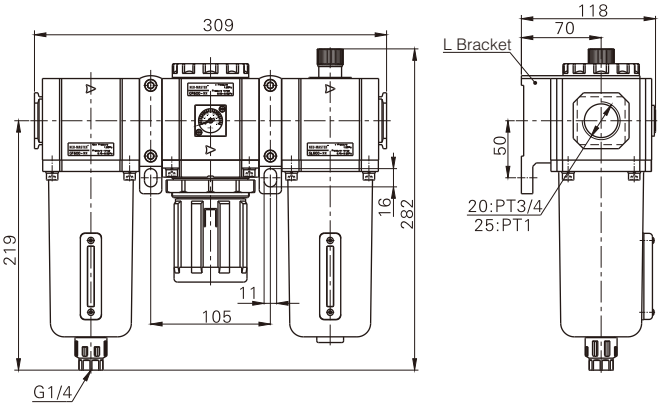

Model\Item	A	B	BA	C	K	KA	KB	P	PA	PB	Q
GC300-08	188	72	41.5	188	6.5	64	9	PT1/4	35	143	G1/8
GC300-10	188	72	41.5	188	6.5	64	9	PT3/8	35	143	G1/8
GC300-15	188	72	41.5	188	6.5	64	9	PT1/2	35	143	G1/8
GC400-10	248	89	50	216	8.6	84	12	PT3/8	40	166.5	G1/4
GC400-15	248	89	50	216	8.6	84	12	PT1/2	40	166.5	G1/4



Symbol

No reflux valve is attached

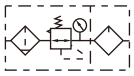

Reflux valve is attached

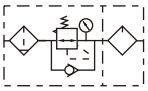

Product feature

1. Quick and reliable mounting clamps makes it convenient to install and use.
2. The performance of pressure adjustment is reliable with high precision.
3. The efficiency of eliminating moisture and solid grain is high.
4. Three drain types are available: manual drain, semi-auto drain and automatic drain.

Ordering code

GFC200 | 08 | M | L | □ | F | 1 | W | G | K

Model

GFC200	G200 Series FR.L unit
GFC300	G300 Series FR.L unit
GFC400	G400 Series FR.L unit
GFC600	G600 Series FR.L unit

Port size

GFC200	06: 1/8"
	08: 1/4"
GFC300	08: 1/4"
	10: 3/8"
	15: 1/2"
GFC400	10: 3/8"
	15: 1/2"
GFC600	20: 3/4"
	25: 1"

Type code

Blank	Standard
L	Lower pressure ①

Pressure gauge

Blank	Pressure gauge
N	No pressure gauge

Drain type

Drain type	Adaptable product's series
Blank: Semi-auto drain	GFC200, GFC300
M: Manual drain	GFC400, GFC600
A: Automatic drain	GFC300, GFC400, GFC600

Pressure gauge shape

F	Square
C	Circular

Scale

1	MPa
2	psi
3	bar

Filtering grade

Blank	40μm
W	5μm

Thread type

Blank	PT
G	G
T	NPT

Code of reflux valve

Blank	No reverse flow valve is attached
K	Reverse flow valve is attached

① The maximum work pressure of lower pressure type is 0.4MPa(58Psi).

Specification

Model		GFC200-06	GFC200-08	GFC300-08	GFC300-10	GFC300-15	GFC400-10	GFC400-15	GFC600-20	GFC600-25
Fluid		Air								
Port size		PT1/8	PT1/4	PT1/4	PT3/8	PT1/2	PT3/8	PT1/2	PT3/4	PT1
Filtering grade		40μm or 5μm								
Pressure range		Semi-auto and automatic drain:0.15~0.9MPa(20~130psi); Manual drain: 0.05~0.9MPa(7~130psi)								
Max. pressure		1.0MPa(145psi)								
Proof pressure		1.5MPa(215psi)								
Temperature range		-5~70℃								
Capacity of drain bowl		10CC		40CC			80CC		230CC	
Capacity of oil bowl		25CC		75CC			160CC		380CC	
Recommended lubricant		ISO VG 32 or equivalent								
Weight		430g		980g			1950g		4320g	
Constitute	Filter-Regulator	GFR200-06	GFR200-08	GFR300-08	GFR300-10	GFR300-15	GFR400-10	GFR400-15	GFR600-20	GFR600-25
	Lubricator	GL200-06	GL200-08	GL300-08	GL300-10	GL300-15	GL400-10	GL400-15	GL600-20	GL600-25

① PT thread, G thread and NPT thread are available.

Inner structure

GFC200

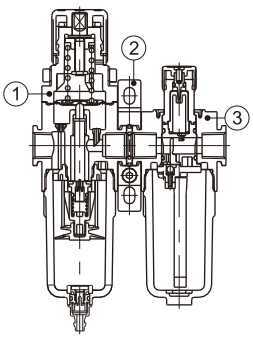

GFC600

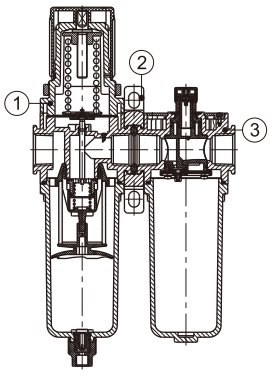

No.	Item
1	G series filter-regulator
2	Bracket
3	G series lubricator

Pressure chart

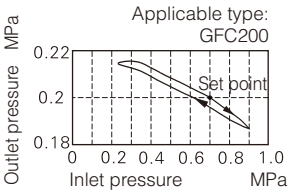

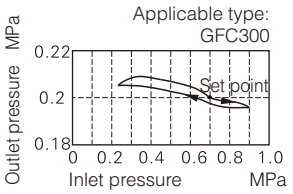

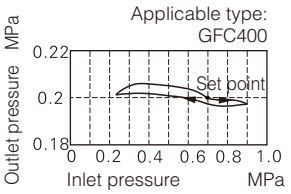

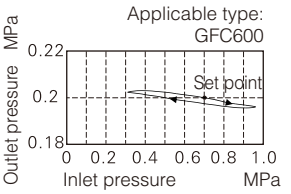

Flow chart

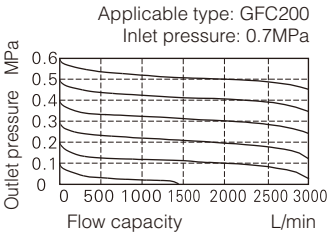

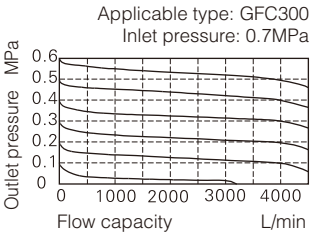

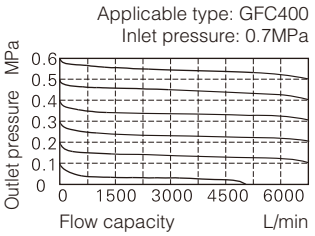

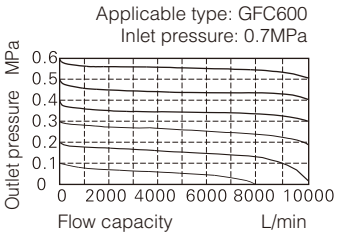

Dimensions

GFC200

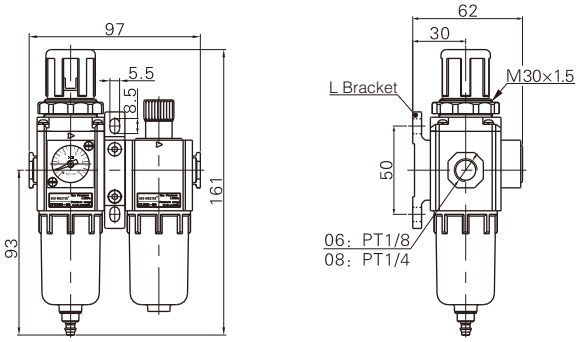

GFC300\GFC400

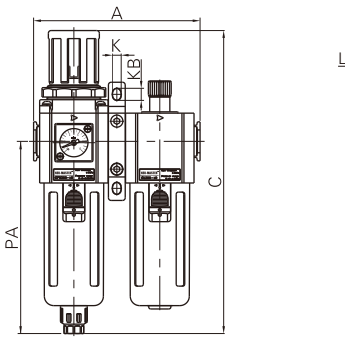

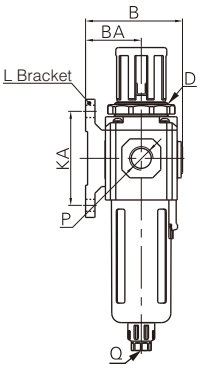

GFC600

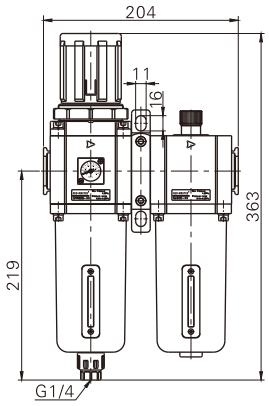

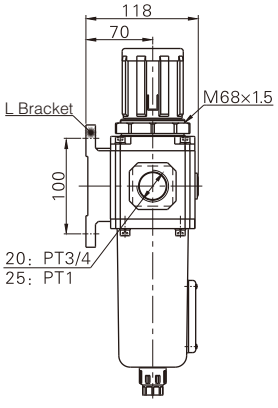

Model\Item	A	B	BA	C	D	K	KA	KB	P	PA	Q
GFC300-08	124	72	41.5	225.5	M40×1.5	6.5	70	9	PT1/4	143	G1/8
GFC300-10	124	72	41.5	225.5	M40×1.5	6.5	70	9	PT3/8	143	G1/8
GFC300-15	124	72	41.5	225.5	M40×1.5	6.5	70	9	PT1/2	143	G1/8
GFC400-10	164	89	50	270.5	M55×2.0	8.5	80	12	PT3/8	166.5	G1/4
GFC400-15	164	89	50	270.5	M55×2.0	8.6	80	12	PT1/2	166.5	G1/4



Symbol

No reflux valve is attached

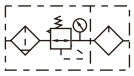

Reflux valve is attached

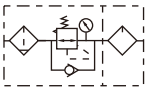

Product feature

1. Embedded square pressure gauge is used to save installation space. (External circular pressure gauge is also optional).
2. The pressed-in self-locking mechanism can prevent the abnormal movement of the set pressure caused by external interfere.
3. Balanced design is adopted for the pressure adjustment cechanism.
4. In addition to standard type, lower pressure type is optional(The highest adjustable pressure is 0.4MPa).
5. Unique diversion structure spins the air flowing through to effectively sparate the liquid from the air and reliabily filter the solid grain.
6. The filtering grade inclueds 5μm and 40μm (optional).
7. Three drain types are available: manual drain, semi-auto drain and automatic drain.
8. The bracket can be selected for installation.

Ordering code

GFR200 | 08 | M | L | □ | □ | F | 1 | W | G | K

Model

GFR200	G200 Series filter-regulator
GFR300	G300 Series filter-regulator
GFR400	G400 Series filter-regulator
GFR600	G600 Series filter-regulator

Port size

GFR200	06: 1/8"
	08: 1/4"
GFR300	08: 1/4"
	10: 3/8"
	15: 1/2"
GFR400	10: 3/8"
	15: 1/2"
GFR600	20: 3/4"
	25: 1"

Drain type

Drain type	Adaptable product's series
Blank: Semi-auto drain	GFR200, GFR300
M: Manual drain	GFR400, GFR600
A: Automatic drain	GFR300, GFR400, GFR600

Type code

Blank	Standard
L	Lower pressure ①

Accessories

Blank	Bracket
J	No braccket

Pressure gauge

Blank	Pressure gauge
N	No Pressure gauge

Pressure gauge shape

F	Square
C	Circular

Scale

1	MPa
2	psi
3	bar

Filtering grade

Blank	40μm
W	5μm

Thread type

Blank	PT
G	G
T	NPT

Code of reflux valve

Blank	No reverse flow valve is attached
K	Reverse flow valve is attached

① The maximum work pressure of lower pressure type is 0.4MPa(58Psi).

Specification

Model	GFR200-06	GFR200-08	GFR300-08	GFR300-10	GFR300-15	GFR400-10	GFR400-15	GFR600-20	GFR600-25
Fluid	Air								
Port size	PT1/8	PT1/4	PT1/4	PT3/8	PT1/2	PT3/8	PT1/2	PT3/4	PT1
Filtering grade	40μm or 5μm								
Pressure range	Semi-auto and automatic drain:0.15~0.9MPa(20~130psi); Manual drain: 0.05~0.9MPa(7~130psi)								
Max. pressure	1.0MPa(145psi)								
Proof pressure	1.5MPa(215psi)								
Temperature range	-5~70℃								
Capacity of drain bowl	10CC		40CC			80CC		230CC	
Weight	220g		500g			1030g		2400g	

① PT thread, G thread and NPT thread are available.

Inner structure and material of major prats

GFR200

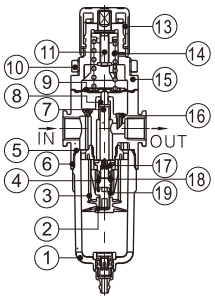

Semi-Auto drain

GFR600

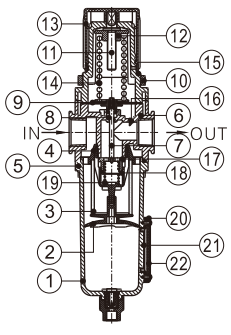

Semi-Auto drain

No.	Item	Material			No.	Item	Material
1	Drain bowl	Aluminum alloy(GFR600)\PC(others)			11	Adjusting spindle	Steel
2	Umbrella baffle	High viscosity POM			12	Regulator nut	Steel
3	Filter core	GFR600		Agglomerated by brass grain	13	Pressure knob	POM
		otherss	40μm	Agglomerated by brass grain	14	Spring	SWC
			5μm	Makrolon fiber	15	Adjusting seat	Aluminum alloy (GFR600)\POM(others)
4	Air guider	High viscosity POM			16	Feedback tube	POM
5	O-ring	NBR			17	Adjusting plug	Brass & Rubber
6	Body of filter-regulator	Aluminum alloy			18	O-ring	NBR
7	Adjusting spool	Brass(GFR600)\POM(others)			19	Spring	SUS304
8	O-ring	NBR			20	Liquid meter cover	SPCC
9	Diaphragm	SUS304 & Rubber			21	Liquid meter seal	VITON
10	Fixation ring cap	Aluminum alloy(GFR600)\POM(others)			22	Liquid meter inside	PC

Pressure chart

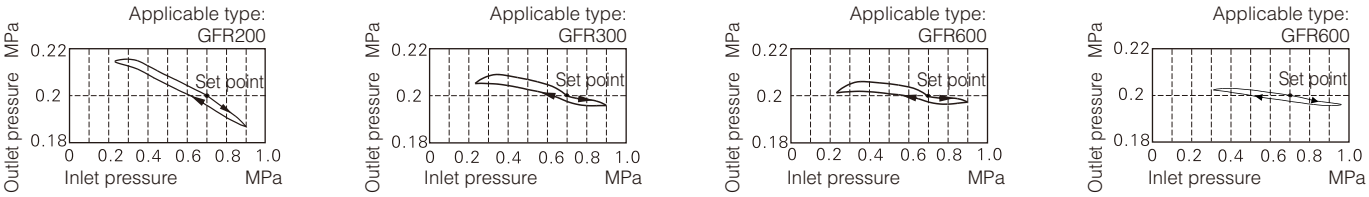

Flow chart

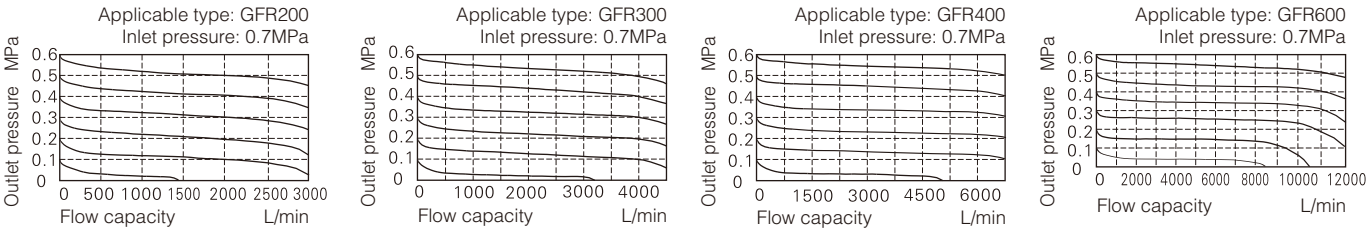

Selection of drain mode

GFR200

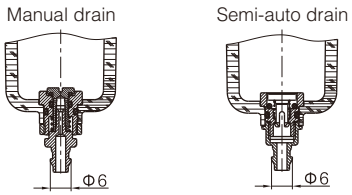

PU tube with an inner diameter of Φ5 or Φ5.5mm is recommended

GFR200\GFR400\GFR600

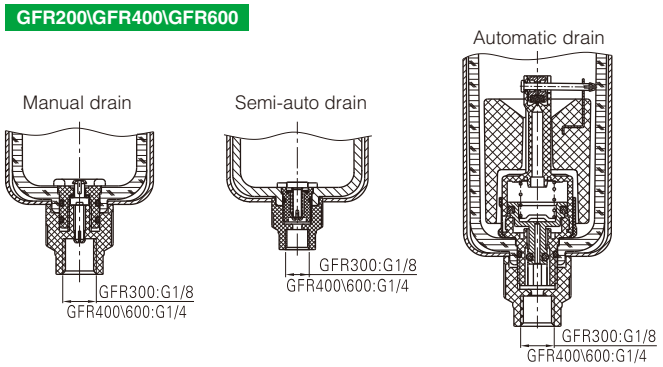

Dimensions

GFR200

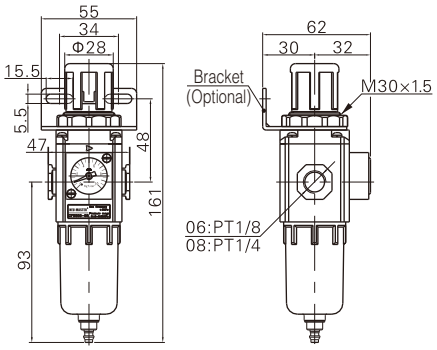

GFR300\GFR400

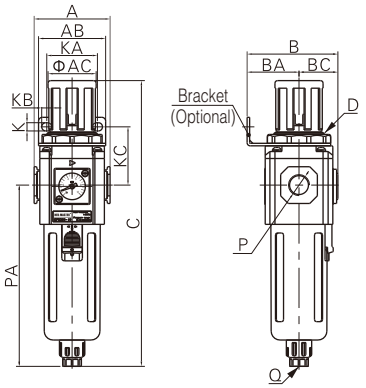

GFR600

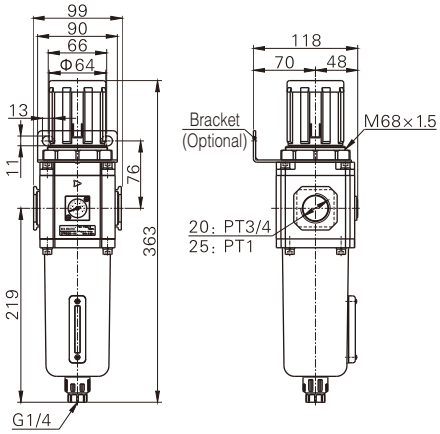

Model\Item	A	AB	AC	B	BA	BC	C	D	K	KA	KB	KC	P	PA	Q
GFR300-08	60	53	38	72	41	31	225.5	M40×1.5	6.5	40	8	46	PT1/4	143	G1/8
GFR300-10	60	53	38	72	41	31	225.5	M40×1.5	6.5	40	8	46	PT3/8	143	G1/8
GFR300-15	60	53	38	72	41	31	225.5	M40×1.5	6.5	40	8	46	PT1/2	143	G1/8
GFR400-10	80	72	52	90	50	40	270.5	M55×2.0	8.5	52	11	53	PT3/8	166.5	G1/4
GFR400-15	80	72	52	90	50	40	270.5	M55×2.0	8.5	52	11	53	PT1/2	166.5	G1/4

Regulating way

The use of GFR series regulators is the same as the SDR series.



Symbol



Product feature

1. Unique diversion structure spins the air flowing through to effectively separate the liquid from the air and reliably filter the solid grain.
2. It has low pressure loss, high efficiency in separating water and large drain bowl capacity.
3. Filtering grade includes 5m and 40m(Optional).
4. Three drain types are available: manual drain, semi-auto drain and automatic drain.
5. The bracket can be selected for installation.

Ordering code

GF200 | 08 | M | □ | W | G

Model

GF200	G200 Series Filter
GF300	G300 Series Filter
GF400	G400 Series Filter
GF600	G600 Series Filter

Port size

GF200	06: 1/8"
	08: 1/4"
GF300	08: 1/4"
	10: 3/8"
	15: 1/2"
GF400	10: 3/8"
	15: 1/2"
GF600	20: 3/4"
	25: 1"

Drain type

Drain type	Adaptable product's series
Blank: Semi-auto drain	GF200, GF300
M: Manual drain	GF400, GF600
A: Automatic drain	GF300, GF400, GF600

Accessories

Blank	Bracket
J	No bracket(standard configuration)

Filtering grade

Blank	40μm
W	5μm

Thread type

Blank	PT
G	G
T	NPT

Specification

Model	GF200-06	GF200-08	GF300-08	GF300-10	GF300-15	GF400-10	GF400-15	GF600-20	GF600-25
Fluid	Air								
Port size	PT1/8	PT1/4	PT1/4	PT3/8	PT1/2	PT3/8	PT1/2	PT3/4	PT1
Filtering grade	40μm or 5μm								
Pressure range	Semi-auto and automatic drain:0.15~1.0MPa(20~145psi); Manual drain: 0~0.9MPa(0~145psi)								
Proof pressure	1.5MPs(215psi)								
Temperature range	-5~70℃								
Capacity of drain bowl	10CC		40CC			80CC		230CC	
Weight	130g		360g			680g		1440g	

① PT thread, G thread and NPT thread are available.

Inner structure and material of major prats

GF200

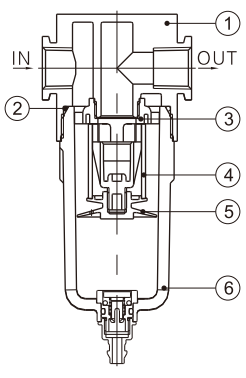

Semi-Auto drain

GF600

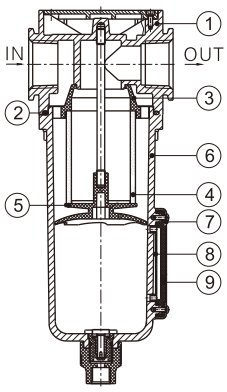

Semi-Auto drain

No.	Item	Material	
1	Body	Aluminum alloy	
2	O-ring	NBR	
3	Air guide	High viscosity POM	
4	Filter core	GFR600	Agglomerated by bronze grain
		Otherss 40μm	Agglomerated by bronze grain
		Otherss 5μm	Makrolom fiber
5	Umbrella baffle	High visvosity POM	
6	Drain bowl	Aluminum alloy(GF600)\PC(Others)	
7	Liquid meter cover	SPCC	
8	Liquid meter seal	VITON	
9	Liquid meter inside cover	PC	

Pressure chart

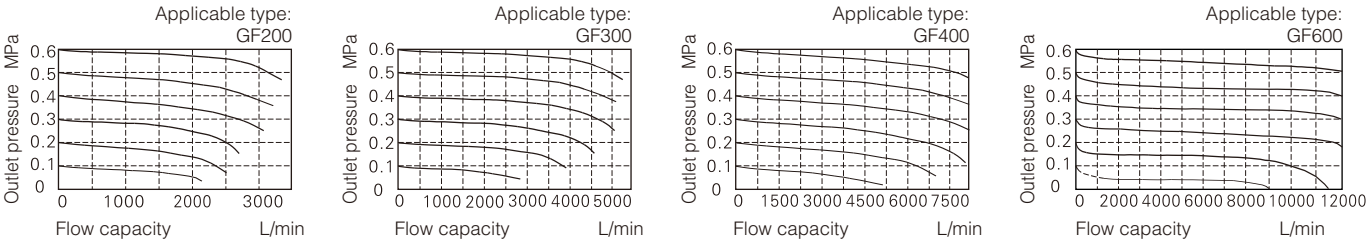

Dimensions

GF200

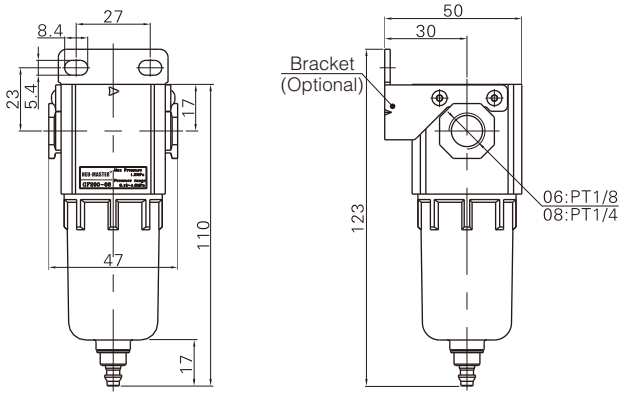

GF300\GF400

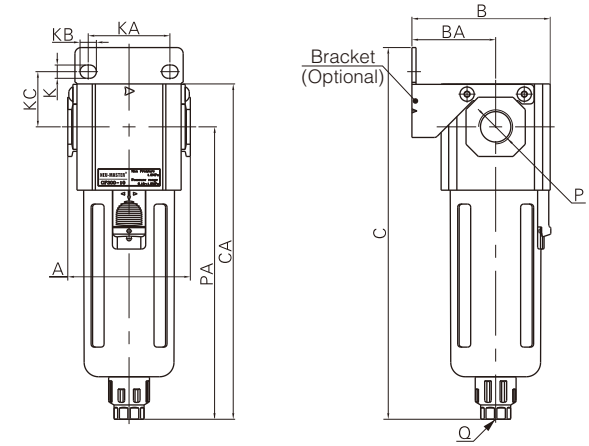

GF600

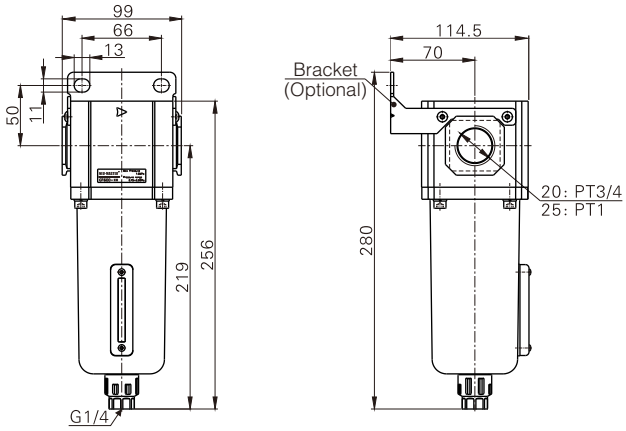

Model\Item	A	B	BA	C	CA	K	KA	KB	KC	P	PA	Q
GF300-08	60	67.5	41	182	164	6.5	40	8	27	PT1/4	143	G1/8
GF300-10	60	67.5	41	182	164	6.5	40	8	27	PT3/8	143	G1/8
GF300-15	60	67.5	41	182	164	6.5	40	8	27	PT1/2	143	G1/8
GF400-10	80	85.5	50	208	191.5	8.5	55	11	33.5	PT3/8	166.5	G1/4
GF400-15	80	85.8	50	208	191.5	8.5	55	11	33.5	PT1/2	166.5	G1/4

Selection of drain mode

GF series drain mode is the same as the GFR series.



Symbol

No Reverse Flow valve is attached



Reverse Flow valve is attached



Product feature

1. Embedded square pressure gauge is used to save installation space. (External circular pressure gauge is also optional).
2. The pressed-in self-locking mechanism can prevent the abnormal movement of the set pressure caused by external interfere.
3. Balanced design is adopted for the pressure adjustment mechanism.
4. In addition to panel installation, the bracket is optional for installation.
5. In addition to standard type, lower pressure type is optional (the highest dajustable pressure is 0.4MPa).

Ordering code

GR200 | 08 | L | □ | □ | F | 1 | G | K

Model

GR200	G200 Series Regulator
GR300	G300 Series Regulator
GR400	G400 Series Regulator
GR600	G600 Series Regulator

Port size

GR200	06: 1/8"
	08: 1/4"
GR300	08: 1/4"
	10: 3/8"
	15: 1/2"
GR400	10: 3/8"
	15: 1/2"
GR600	20: 3/4"
	25: 1"

Type code

Blank	Standard
L	Lower pressure ①

Accessories

Blank	Bracket
J	No bracket(standard configuration)

Pressure gauge

Blank	Pressure gauge
N	No Pressure gauge

Pressure gauge shape

F	Square
C	Circular

Scale

1	MPa
2	psi
3	bar

Thread type

Blank	PT
G	G
T	NPT

Code of reflux valve

Blank	No reverse flow valve is attached
K	Reverse flow valve is attached

① The maximum work pressure of lower pressure type is 0.4MPa(58Psi).

Specification

Model	GR200-06	GR200-08	GR300-08	GR300-10	GR300-15	GR400-10	GR400-15	GR600-20	GR600-25
Fluid	Air								
Port size	PT1/8	PT1/4	PT1/4	PT3/8	PT1/2	PT3/8	PT1/2	PT3/4	PT1
Pressure range	0.05~0.9MPa(7~130psi)								
Max. pressure	1.0MPa(145psi)								
Proof pressure	1.5MPa(215psi)								
Temperature range	-20~70℃								
Weight	160g		350g			720g		1700g	

① PT thread, G thread and NPT thread are available.

Inner structure and material of major prats

GF200

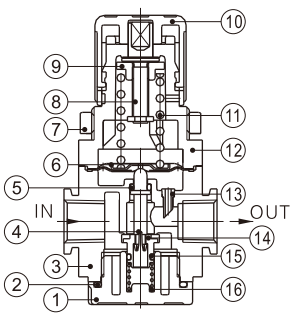

GF600

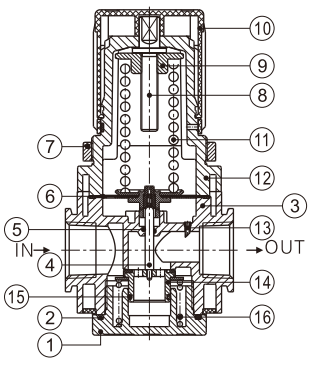

No.	Item	Material
1	Valve cap	Aluminum alloy
2	O-ring	NBR
3	Body	Aluminum alloy
4	Spool	Brass(GR600)\POM(others)
5	O-ring	NBR
6	Diaphragm	SUS304 & Rubber
7	Fixed ring	Aluminum alloy(GR600)\POM(Others)
8	Adjusting spindle	Steel
9	Regulator nut	Steel
10	Pressure knob	POM
11	Pressure spring	SWC
12	Adjusting seat	Aluminum alloy(GR600)\POM(Others)
13	Feed back tuble	POM
14	Pressure plug	Brass & steel
15	O-ring	NBR
16	Spring	Stainless steel

Pressure chart

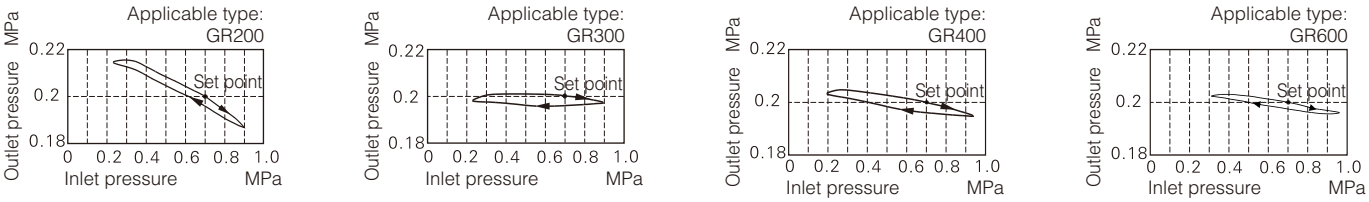

Flow chart

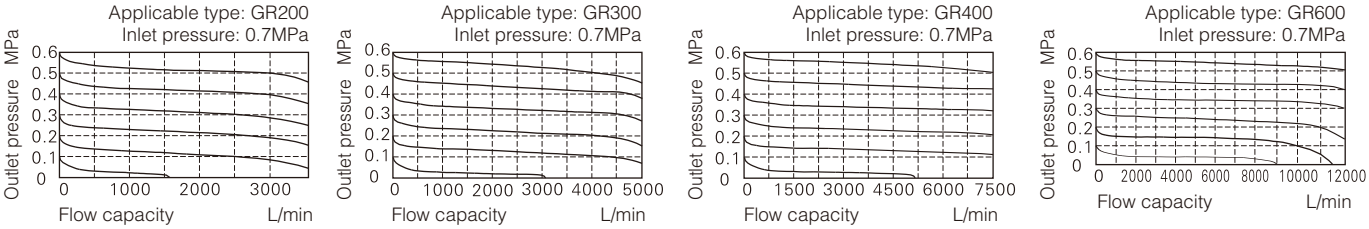

Dimensions

GR200

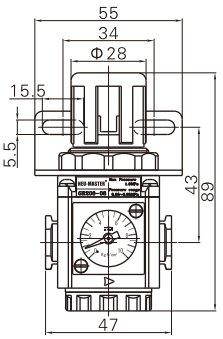

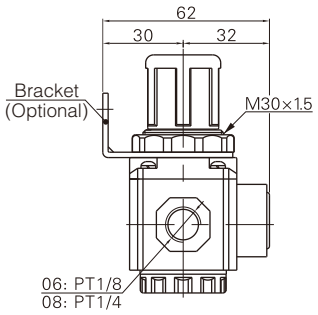

GR300\GR400

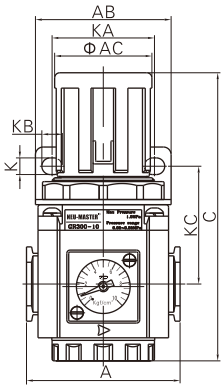

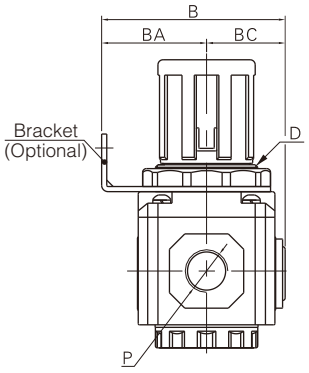

GR200

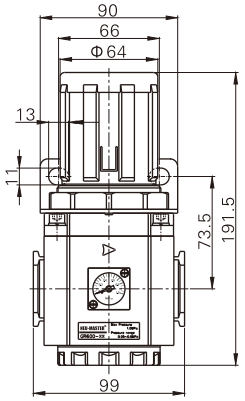

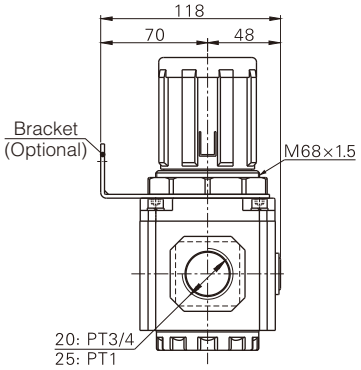

Model\Item	A	AB	AC	B	BA	BC	C	D	K	KA	KB	KC	P
GR300-08	60	53	38	72	41	31	112.5	M40×1.5	6.5	40	8	46	PT1/4
GR300-10	60	53	38	72	41	31	112.5	M40×1.5	6.5	40	8	46	PT3/8
GR300-15	60	53	38	72	41	31	112.5	M40×1.5	6.5	40	8	46	PT1/2
GR400-10	80	72	52	90	50	40	140.5	M55×2.0	8.5	52	11	53	PT3/8
GR300-15	80	72	52	90	50	40	140.5	M55×2.0	8.5	52	11	53	PT1/2

Regulating way

The use of GR series regulators is the same as the SDR series.



Symbol



Product feature

1. The structure of oil dripping adopts gap seal type, which makes the adjustment of oil supply more reliable.
2. Oil feed ring can only maek one full turn. The quantity of oil supply basically takes on linear distribution. The quantity of oil supply can be generally calculated according to the position of graduation ring.
3. Special drip nozzle structure will produce negative pressure in oil dripping outlet and the mist flow is minimal.
4. Filling of oil while the lubricator is under pressure is made possible, and the oil bowl is large.
5. The bracket can be selected for installation.

Ordering code

GL200 — **Model**

GL200	G200 Series Lubricator
GL300	G300 Series Lubricator
GL400	G400 Series Lubricator
GL600	G600 Series Lubricator

08 — **Port size**

GL200	06: 1/8"
	08: 1/4"
GL300	08: 1/4"
	10: 3/8"
	15: 1/2"
GL400	10: 3/8"
	15: 1/2"
GL600	20: 3/4"
	25: 1"

□ — **Accessories**

Blank	Bracket
J	No bracket(standard configuration)

G — **Thread type**

Blank	PT
G	G
T	NPT

Specification

Model	GL200-06	GL200-08	GL300-08	GL300-10	GL300-15	GL400-10	GL400-15	GL600-20	GL600-25
Fluid	Air								
Port size	PT1/8	PT1/4	PT1/4	PT3/8	PT1/2	PT3/8	PT1/2	PT3/4	PT1
Pressure range	0.05~1.0MPa(7~145psi)								
Proof pressure	1.5MPa(215psi)								
Temperature range	-5~70℃								
Recommended lubricant	ISO VG 32 or equivalent								
Capacity of drain bowl	25CC		75CC			160CC		380CC	
Weight	130g		360g			670g		1300g	

① PT thread, G thread and NPT thread are available.

Inner structure and material of major prats

GL200

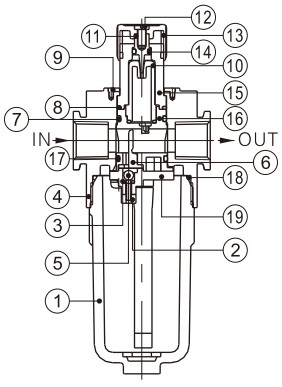

GL600

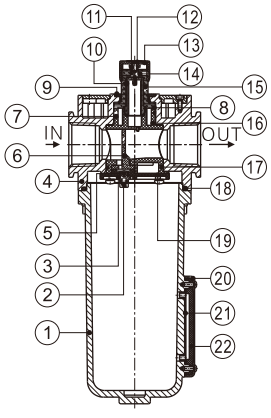

No.	Item	Material	No.	Item	Material
1	Oil bowl	Aluminum alloy (GL600)\PC(others)	12	Screw	Carbon steel
2	Adjusting spring	Stainless steel	13	Adjusting ring	POM
3	O-ring	NBR	14	O-ring	NBR
4	Body of lubricator	Aluminum alloy	15	Bowl	PC
5	Steel ball	Stainless steel	16	Sprayer body	PA66
6	Distance block	TPU	17	O-ring	NBR
7	O-ring	NBR	18	O-ring	NBR
8	O-ring	NBR	19	Sprayer bottom cap	POM
9	Indicating ring	POM	20	Liquid meter cover	SPCC
10	Drip pipe	PC	21	Liquid meter seal	NBR
11	Ejector pin	Brass	22	Liquid meter inside cover	PC

Pressure chart

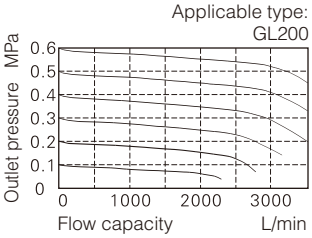

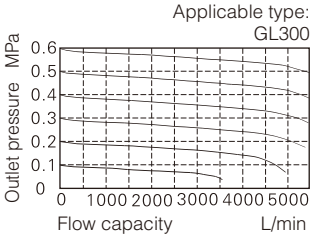

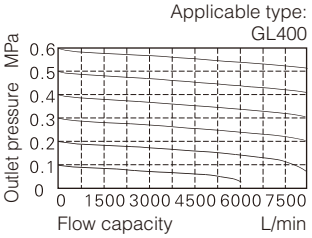

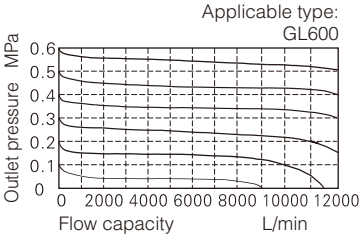

Dimensions

GL200

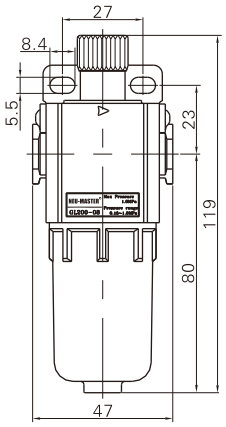

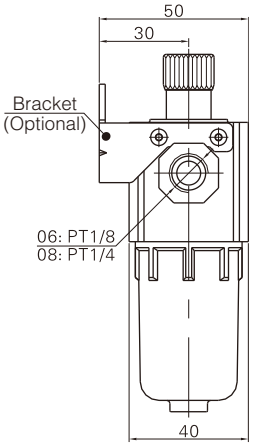

GL300\GL400

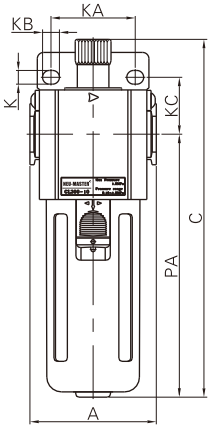

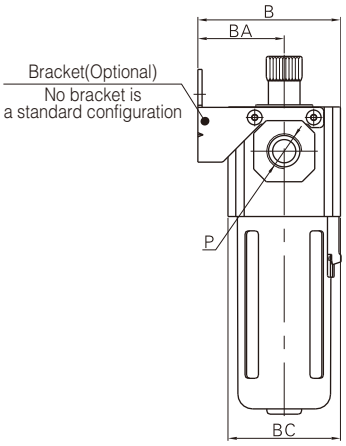

GL600

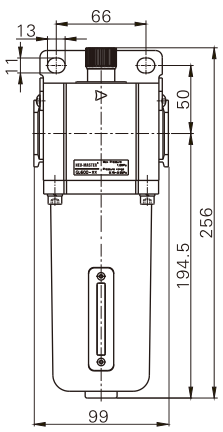

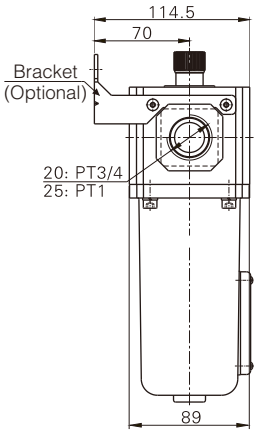

Model\Item	A	B	BA	BC	C	K	KA	KB	KC	P	PA
GL300−08	60	68	41	53.5	169	6.5	40	8	27	PT1/4	125
GL300−10	60	68	41	53.5	169	6.5	40	8	27	PT3/8	125
GL300−15	60	68	41	53.5	169	6.5	40	8	27	PT1/2	125
GL400−10	80	85.5	50	71	190	8.5	55	11	33.5	PT3/8	142
GL400−15	80	85.5	50	71	190	8.5	55	11	33.5	PT1/2	142



Symbol

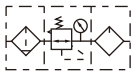

Product feature

1. The structure is delicate and compact, which is convenient for installation and application.
2. The pressed-in self-locking mechanism can prevent the abnormal movement of the set pressure caused by external interfere.
3. The pressure loss is low and the efficiency of water separating is high.
4. The quantity of oil dripping can be directly observed through rtandsparent check-dome.
5. In addition to standard type, lower pressure type is optional(The highest adjustable pressure is 0.4MPa).

Ordering code

AC 2000 M □ □ 1 W □

Model

AC	A Series F.R.L unit
BC	B Series F.R.L unit

Port size

Series	Port size
AC	1500: 1/8"
	2000: 1/4"
BC	2000: 1/4"
	3000: 3/8"
	4000: 1/2"

Type code

Blank	Standard(0.9MPa)
L	Lower pressure(0.4MPa)

Pressure gauge

Blank	Pressure gauge
N	No pressure gauge

Drain type

Series	Drain type
AC	Blank: Semi-auto drain
	M: Manual drain
BC	Blank: Semi-auto drain
	M: Manual drain
	A: Automatic drain

Scale

1	Mpa
2	psi
3	bar
4	Double scale(psi、kgf/cm^2)

Filtering grade

Blank	40μm
W	5μm

Thread type

Thread type		Scale
Blank	PT	MPa or kgf/cm^2 & psi
G	G	bar
T	NPT	psi

Specification

Model		AC1500	AC2000	BC2000	BC3000	BC4000
Fluid		Air				
Port size		PT1/8	PT1/4	PT1/4	PT3/8	PT1/2
Filtering grade		40μm or 5μm				
Pressure range		Semi-auto and automatic drain:0.15~0.9MPa(20~130psi); Manual drain: 0.05~0.9MPa(7~130psi)				
Max. pressure		1.0MPa(145psi)				
Proof pressure		1.5MPa(215psi)				
Temperature range		-5~70℃				
Capacity of drain bowl		10CC		60CC		
Capacity of oil bowl		25CC		90CC		
Recommended		ISO VG 32 or equivalent				
Weight		700g		900g		
Constitute	Filter	AF1500	AF2000	BF2000	BF3000	BF4000
	Regulator	AR1500	AR2000	BR2000	BR3000	BR4000
	Lubricator	AL1500	AL2000	BL2000	BL3000	BL4000

① PT thread, G thread and NPT thread are available.

Inner structure

AC

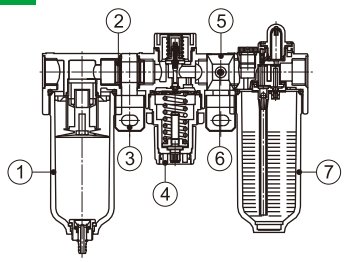

BC

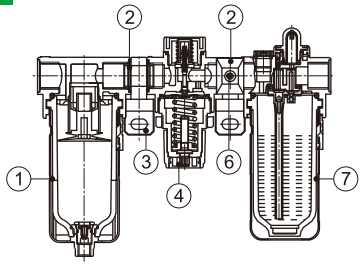

No.	Item
1	AF, BF series filter
2	A, B Series gasket
3	A, B Series bracket
4	AR, BR Series regulator
5	A, B Series fix kit
6	Screw
7	AL, BL Series lubricator

Pressure chart

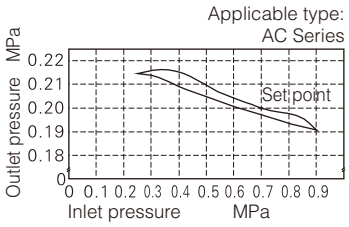

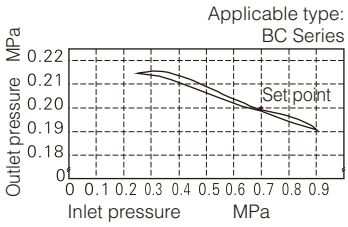

Flow chart

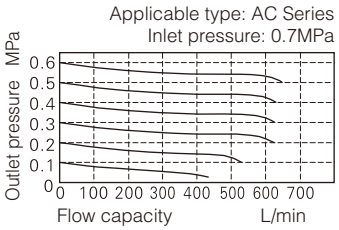

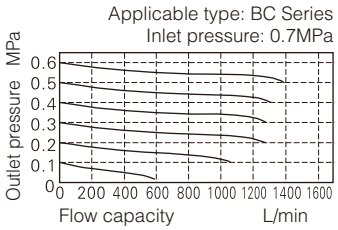

Selection of drain mode

AC

Manual drain

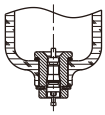

Semi-auto drain

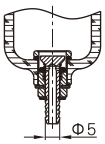

This semi-auto drain can also achieve the function of manual drain PU tube with an inner drameter of Φ4mm is recommended

BC

Manual drain

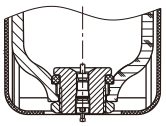

Semi-auto drain

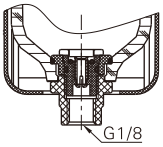

Automatic drain

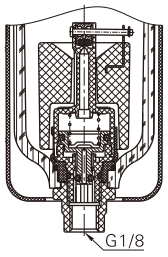

Dimensions

AC

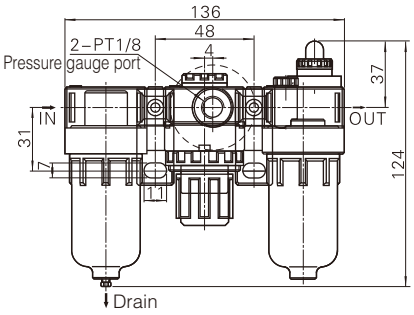

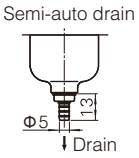

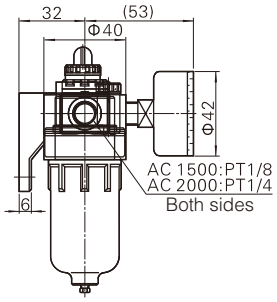

BC

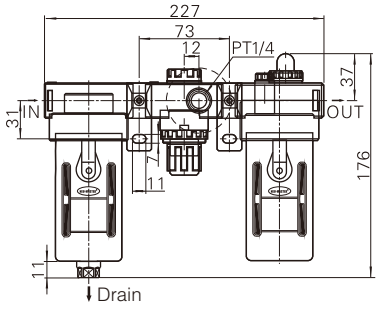

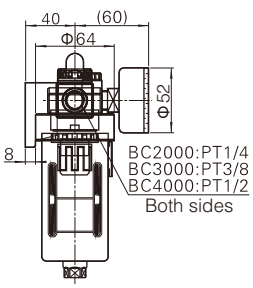

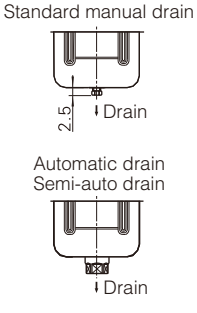



Symbol

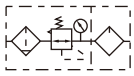

Product feature

1. The structure is delicate and compact, which is convenient for installation and application.
2. The pressed-in self-locking mechanism can prevent the abnormal movement of the set pressure caused by external interfere.
3. The pressure loss is low and the efficiency of water separating is high.
4. The quantity of oil dripping can be directly observed through rtandsparent check dome.
5. In addition to standard type, lower pressure type is optional(The highest adjustable pressure is 0.4MPa).

Ordering code

AFC 2000 M □ □ 1 W □

Model

AFC	A Series FR.L unit
BFC	B Series FR.L unit

Port size

Series	Port size
AFC	1500: 1/8"
	2000: 1/4"
BFC	2000: 1/4"
	3000: 3/8"
	4000: 1/2"

Type code

Blank	Standard(0.9MPa)
L	Lower pressure(0.4MPa)

Pressure gauge

Blank	Pressure gauge
N	No pressure gauge

Drain type

Series	Drain type
AFC	Blank: Semi-auto drain
	M: Manual drain
BFC	Blank: Semi-auto drain
	M: Manual drain
	A: Automatic drain

Scale

1	Mpa
2	psi
3	bar
4	Double scale(psi、kgf/cm^2)

Filtering grade

Blank	40μm
W	5μm

Thread type

Thread type		Scale
Blank	PT	MPa or kgf/cm^2 & psi
G	G	bar
T	NPT	psi

Specification

Model		AFC1500	AFC2000	BFC2000	BFC3000	BFC4000
Fluid		Air				
Port size		PT1/8	PT1/4	PT1/4	PT3/8	PT1/2
Filtering grade		40μm or 5μm				
Pressure range		Semi-auto and automatic drain:0.15~0.9MPa(20~130psi); Manual drain: 0.05~0.9MPa(7~130psi)				
Max. pressure		1.0MPa(145psi)				
Proof pressure		1.5MPa(215psi)				
Temperature range		-5~70℃				
Capacity of drain bowl		10CC		60CC		
Capacity of oil bowl		25CC		90CC		
Recommended lubricant		ISO VG 32 or equivalent				
Weight		500g		700g		
Constitute	Filter-Regulator	AFR 1500	AFR 2000	BFR 2000	BFR 3000	BFR4000
	Lubricator	AL1500	AL2000	BL 2000	BL 3000	BL 4000

① PT thread, G thread and NPT thread are available.

Inner structure

AFC

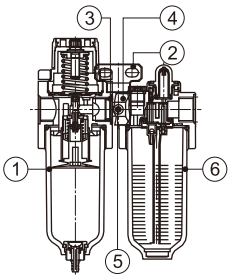

BFC

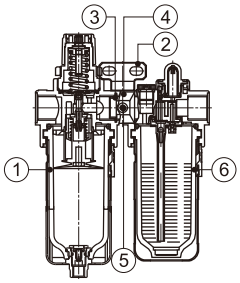

No.	Item
1	AFF, BFF series filter & regulator
2	A, B Series bracket
3	A, B Series gasket
4	A, B series fixed kit
5	Screw
6	AL, BL Series lubricator

Pressure chart

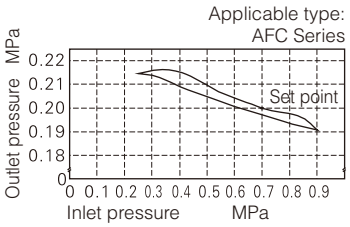

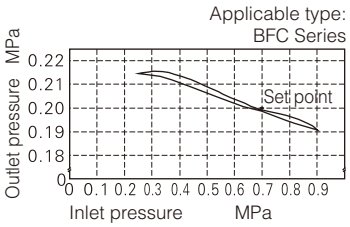

Flow chart

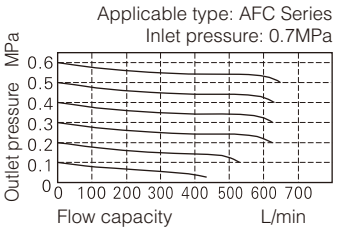

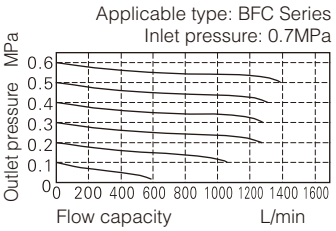

Selection of drain mode

The drain modes of different series are different.
Please refer to AC\BC for details.

Dimensions

AFC

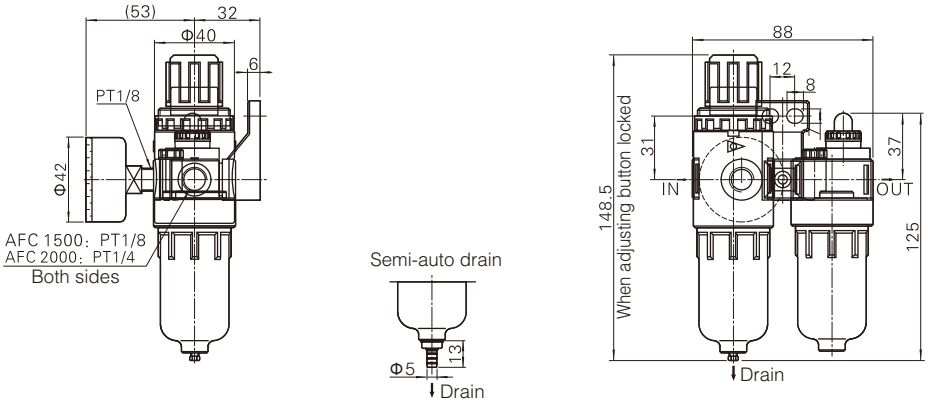

BFC

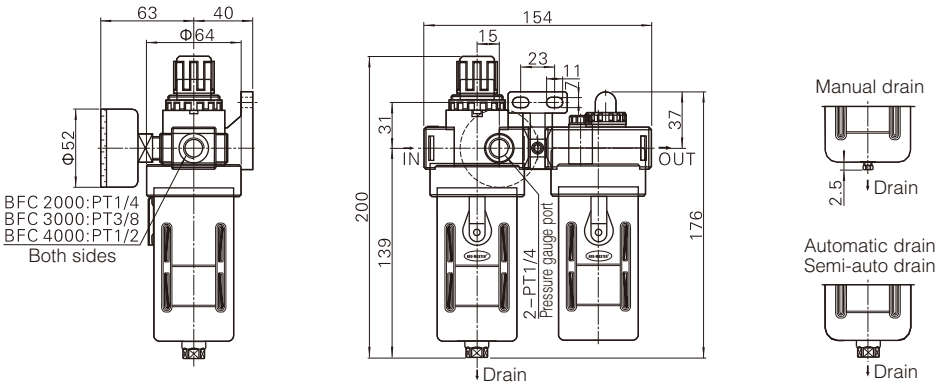



Symbol

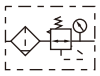

Product feature

1. The structure is delicate and compact, which is convenient for installation and application.
2. The pressed-in self-locking mechanism can prevent the abnormal movement of the set pressure caused by external interfere.
3. The pressure loss is low and the efficiency of water separating is high.
4. In addition to standard type, lower pressure type is optional(The highest adjustable pressure is 0.4MPa).

Ordering code

AFR 2000 M □ □ □ 1 W □

Model

AFR	A Series Filter & regulator
BFR	B Series Filter & regulator

Port size

Series	Port size
AFR	1500: 1/8"
	2000: 1/4"
BFR	2000: 1/4"
	3000: 3/8"
	4000: 1/2"

Type code

Blank	Standard(0.9MPa)
L	Lower pressure(0.4MPa)

Accessories

Blank	Bracket
J	No bracket

Drain type

Series	Drain type
AFR	Blank: Semi-auto drain
	M: Manual drain
BFR	Blank: Semi-auto drain
	M: Manual drain
	A: Automatic drain

Pressure gauge

Blank	Pressure gauge
N	No pressure gauge

Scale

1	Mpa
2	psi
3	bar
4	Double scale(psi、kgf/cm²)

Filtering grade

Blank	40μm
W	5μm

Thread type

Thread type		Scale
Blank	PT	MPa or kgf/cm² & psi
G	G	bar
T	NPT	psi

Specification

Model	AFR1500	AFR2000	BFR2000	BFR3000	BFR4000
Fluid	Air				
Port size	PT1/8	PT1/4	PT1/4	PT3/8	PT1/2
Filtering grade	40μm or 5μm				
Pressure range	Semi-auto and automatic drain:0.15~0.9MPa(20~130psi); Manual drain: 0.05~0.9MPa(7~130psi)				
Max. pressure	1.0MPa(145psi)				
Proof pressure	1.5MPa(215psi)				
Temperature range	-5~70℃				
Capacity of drain bowl	15CC		60CC		
Weight	260g		400g		

① PT thread, G thread and NPT thread are available.

Inner structure and material of major prats

AFR

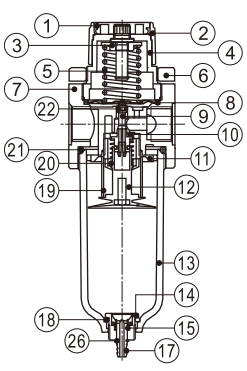

BFR

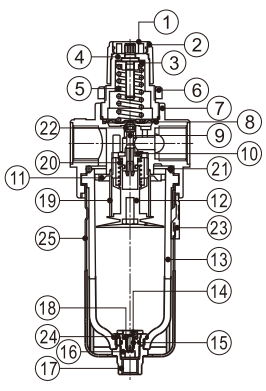

No.	Item	Material	No.	Item		Material
1	Posh button	POM	15	Return spring		Stainless steel
2	Adjusting button	POM	16	Drain seat		POM
3	Adjusting nut	Steel	17	Drain pillar		POM
4	Adjusting seat	POM	18	Drain O-ring		NBR
5	Adjusting spring	SWC	19	Filter element	40μm	Madrolon fiber
6	Fixed ring	POM			5μm	Agglomerated by bronze grain
7	Body	Aluminum alloy	20	Return spring		Stainless steel
8	Diaphragm	SUS304 & rubber	21	Drain bowl O-ring		NBR
9	Balance needle	POM	22	Needle O-ring		NBR
10	Needle gasket	Aluminum alloy & rubber	23	Bowl guard switch		POM
11	Air guider	POM	24	Gasket		POM
12	Umbrella baffle	POM	25	Bowl guard		PA66
13	Drain bowl	PC	26	Clip		Spring steel
14	Drain kit	POM				

Pressure chart

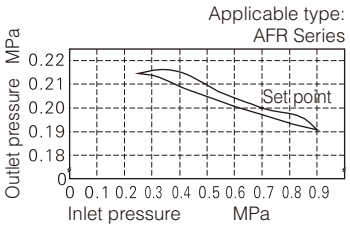

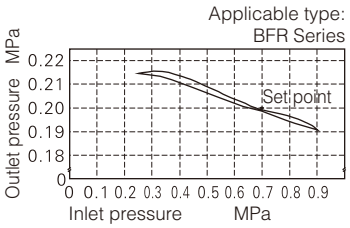

Flow chart

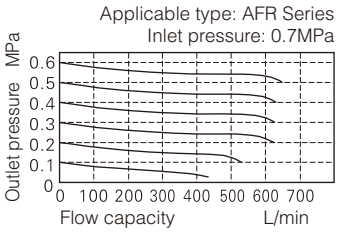

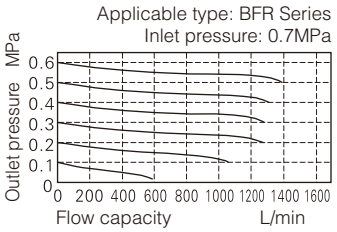

Selection of drain mode

The drain modes of different series are different.
Please refer to AC\BC for details.

Dimensions

AFC

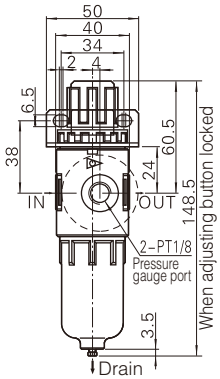

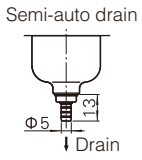

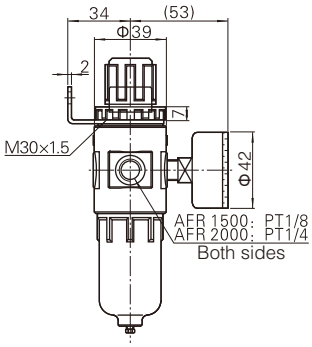

BFR

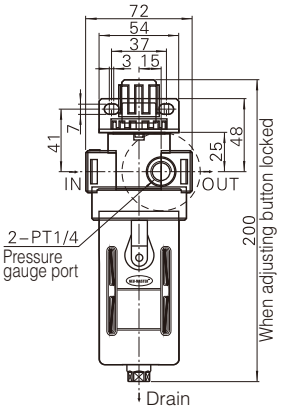

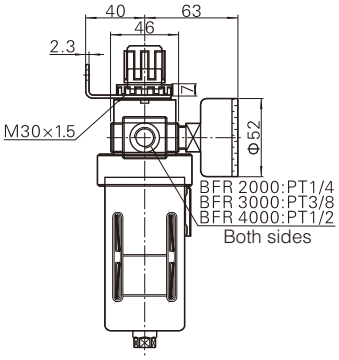

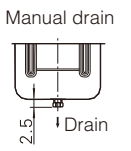

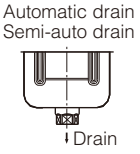



Symbol

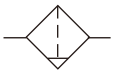

Product feature

AF series
1. The structure is delicate and compact.
2. The pressed loss is low and the efficiency of water separting is high.
3. The filter precision includes 5μm and 40μm(optional).

BF series
1. The pressure loss is low and the efficiency of water separating is high.
2. The bowl has high-strength plastic shields outside, which is more safe and reliable to use.
3. The filter precision includes 5μm and 40μm(optional).

Ordering code

AF 2000 M W □

Model

AF	A Series Filter
BF	B Series Filter

Port size

Series	Port size
AF	1500: 1/8"
	2000: 1/4"
BF	2000: 1/4"
	3000: 3/8"
	4000: 1/2"

Drain type

Series	Drain type
AF	Blank: Semi-auto drain
	M: Manual drain
BF	Blank: Semi-auto drain
	M: Manual drain
	A: Automatic drain

Filtering grade

Blank	40μm
W	5μm

Thread type

Blank	PT
G	G
T	NPT

Flow chart

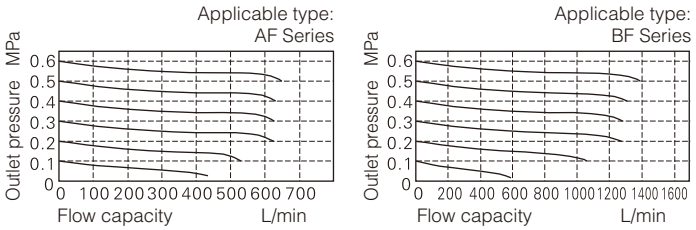

Selection of drain mode

The drain modes of different series are different; Please refer to AC\BC for details.

Specification

Model	AF1500	AF2000	BF2000	BF3000	BF4000
Fluid	Air				
Port size	PT1/8	PT1/4	PT1/4	PT3/8	PT1/2
Filtering grade	40μm or 5μm				
Pressure range	Semi-auto and automatic drain:0.15~0.9MPa(20~145psi); Manual drain: 0.05~0.9MPa(7~145psi)				
Proof pressure	1.5MPa(215psi)				
Temperature range	-5~70℃				
Capacity of drain bowl	15CC		60CC		
Weight	140g		330g		

① PT thread, G thread and NPT thread are available.

Inner structure and material of major prats

AF

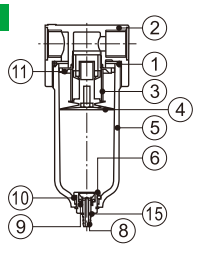

BF

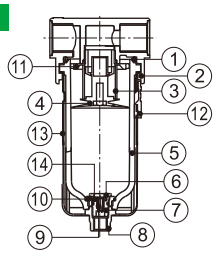

No.	Item		Material	No.	Item	Material
1	Drain bowl O-ring		NBR	8	Drain pillar	POM
2	Body		Aluminum alloy	9	Return spring	Stainless steel
3	Filter element	40μm	Makrolon fiber	10	Gasket	POM
		5μm	Agglomerated by bronze grain	11	Air guider	POM
4	Umbrella baffle		POM	12	Bowl guard switch	POM
5	Drain bowl		PC	13	Bowl guard	PA6
6	Drain kit		POM	14	Drain seat O-ring	NBR
7	Drain seat		POM	15	Clip	Spring steel

Dimensions

AFC

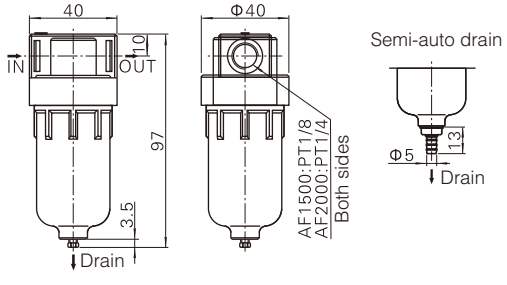

BFR

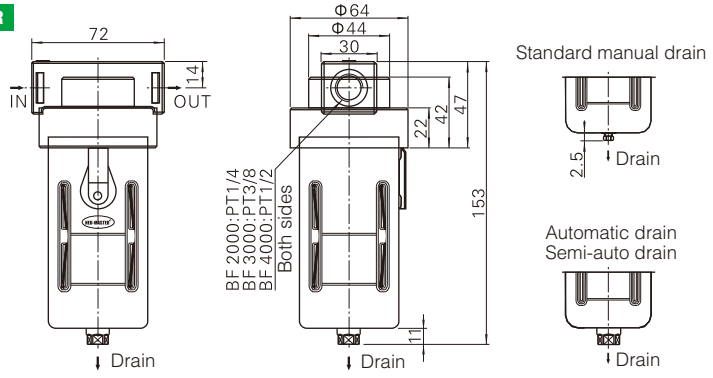



Symbol



Product feature

1. The structure is delicate and compact, which is convenient for installation and application.
2. The pressed-in self-locking mechanism can prevent the abnormal movement of the set pressure caused by external interfere.
3. In addition to standard type, lower pressure type is optional(The highest adjustable pressure is 0.4MPa).

Ordering code

AR 2000 L □ □ 1 □

Model

AR	A Series Regulator
BR	B Series Regulator

Port size

Series	Port size
AR	1500: 1/8"
	2000: 1/4"
BR	2000: 1/4"
	3000: 3/8"
	4000: 1/2"

Type code

Blank	Standard(0.9MPa)
L	Lower pressure(0.4MPa)

Accessories

Blank	Bracket
J	No bracket

Pressure gauge

Blank	Pressure gauge
N	No pressure gauge

Scale

1	Mpa
2	psi
3	bar
4	Double scale(psi、kgf/cm^2)

Thread type

Thread type		Scale
Blank	PT	MPa or kgf/cm^2 & psi
G	G	bar
T	NPT	psi

Specification

Model	AR1500	AR2000	BR2000	BR3000	BR4000
Fluid	Air				
Port size	PT1/8	PT1/4	PT1/4	PT3/8	PT1/2
Pressure range	0.05~0.9MPa(7~130psi)				
Max. pressure	1.0MPa(145psi)				
Proof pressure	1.5MPa(215psi)				
Temperature range	-5~70℃				
Weight	200g		230g		

① PT thread, G thread and NPT thread are available.

Inner structure and material of major prats

AR

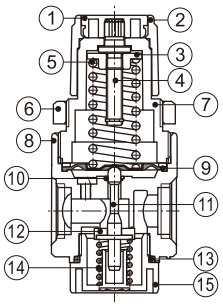

BR

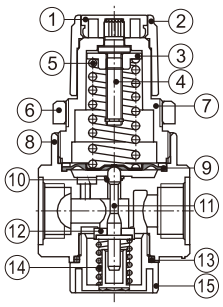

No.	Item	Material
1	Push button	POM
2	Adjusting button	POM
3	Adjusting nut	Steel
4	Adjusting pillar	Steel
5	Adjusting spring	SWC
6	Fixed ring	POM
7	Adjusting seat	POM
8	Body	Aluminum alloy
9	Diaphragm	SUS304 & rubber
10	Needle O-ring	NBR
11	Balance needle	POM
12	Needle gasket	Aluminum alloy & rubber
13	Cap O-ring	NBR
14	Return spring	Stainless steel
15	Regulator cap	POM

Pressure chart

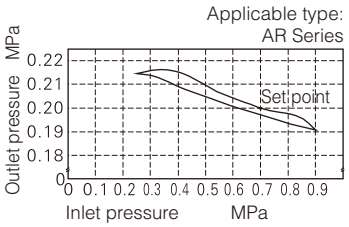

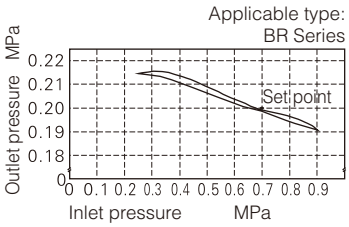

Flow chart

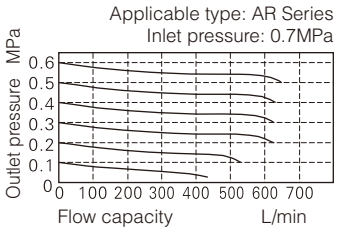

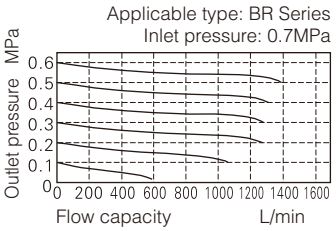

Dimensions

AR

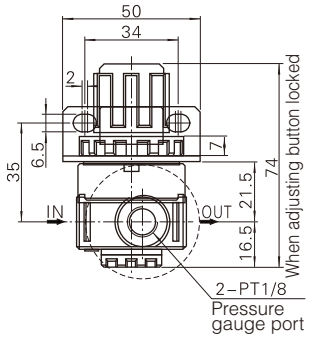

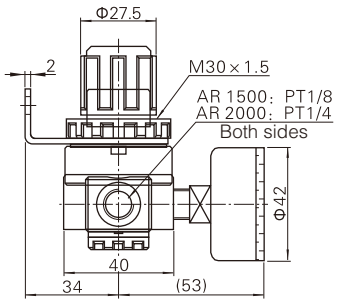

BR

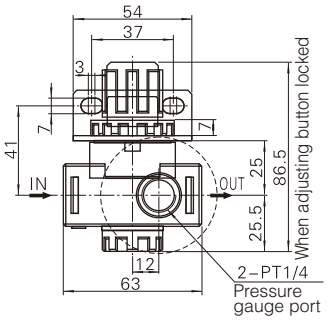

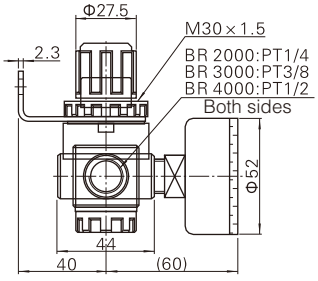



Symbol

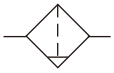

Product feature

1. The structure is delicate and compact.
2. The quantity of oil dripping can be directly observed through transparent inspection sheet.
3. BL has high-strength plastic shields, which is more safe and reliable to use.
4. The pressure loss and the flow of miststart is low.

Ordering code

AL — Model

AL	A Series lubricator
BL	B Series lubricator

2000 — Port size

Series	Port size
AL	1500: 1/8"
	2000: 1/4"
BL	2000: 1/4"
	3000: 3/8"
	4000: 1/2"

□ — Thread type

Blank	PT
G	G
T	NPT

Flow chart

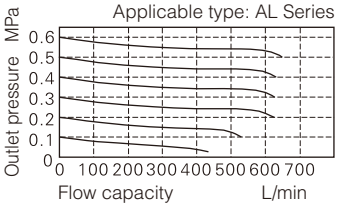

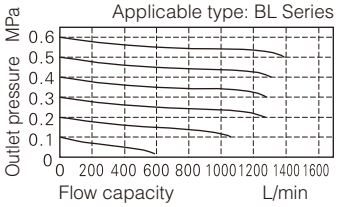

Specification

Model	AL1500	AL2000	BL2000	BL3000	BL4000
Fluid	Air				
Port size	PT1/8	PT1/4	PT1/4	PT3/8	PT1/2
Pressure range	0.05~1.0MPa(7~145psi)				
Proof pressure	1.5MPa(215psi)				
Temperature range	-5~70℃				
Capacity of drain bowl	25CC		90CC		
Recommended	ISO VG 32 or equivalent				
Weight	170g		250g		

① PT thread, G thread and NPT thread are available.

Inner structure and material of major prats

AL

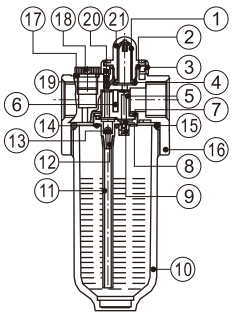

BL

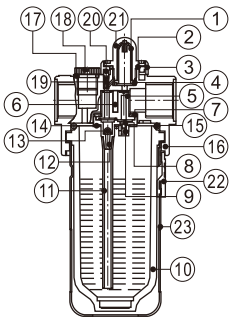

No.	Item	Material	No.	Item	Material
1	Drip pipe	PC	13	Ball	Stainless steel
2	Dripper O-ring	NBR	14	Lubricator fixed plate	SPCC
3	Oil adjusting dial	POM	15	Oil bowl O-ring	NBR
4	Adjusting ring	NBR	16	Body	Aluminum alloy
5	Lubricator seat	POM	17	Oil filling nut O-ring	NBR
6	Partition	PU	18	Oil filling plug	Steel
7	Lubricator kit gasket	NBR	19	Needle spring	Stainless steel
8	Adjustor	HDPE	20	Injector pin	Bronze
9	Return spring	Stainless steel	21	Check-dome	PC
10	Oil bowl	PC	22	Bowl guard switch	POM
11	Sunk tube	PU	23	Bowl guard	PA6
12	Lubricator kit	POM			

Dimensions

AL

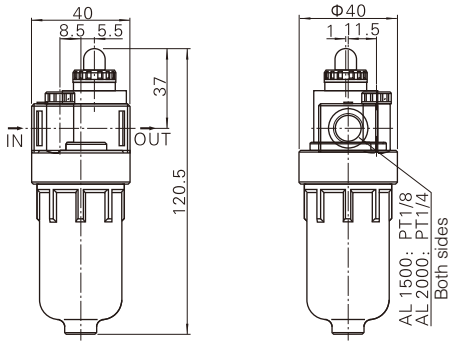

BL

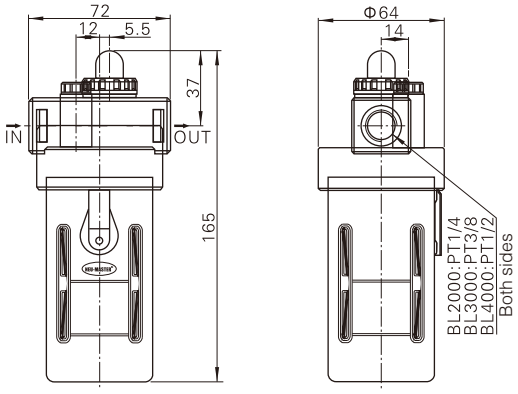



Symbol

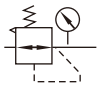

Product feature

1. Panel support can be chosen for the installation of regulator with independent use in pipeline.
2. The structure is delicate and compact, which is convenient for installation and application.
3. The performance of pressure adjustment is reliable and steady.
4. In addition to standard type, lower pressure type is optional(The highest adjustable pressure is 0.4 MPa).

Ordering code

SR 2000 08 L □ □ 1 □

Model

SR	Regulator(Mini type)

Series code

200	200 Series

Port size

06	1/8"
08	1/4"

Type code

Blank	Standard
L	Lower pressure

Accessories

Blank	Bracket
J	No bracket

Pressure gauge

Blank	Pressure gauge
N	No pressure gauge

Scale

1	Mpa
2	psi
3	bar
4	Double scale(psi、kgf/cm²)

Thread type

Thread type	Scale
Blank PT	MPa or kgf/cm² & psi
G G	bar
T NPT	psi

Specification

Model	SR200-06	SR200L-06	SR200-08	SR200L-08
Fluid	Air			
Port size	PT1/8		PT1/4	
Pressure range	Standard type: 0.05~0.9MPa(7~130psi); Lower pressure type: 0.03~0.4MPa(4~57psi)			
Max. pressure	1.0MPa(145psi)			
Proof pressure	1.5MPa(215psi)			
Temperature range	-20~70℃			

① PT thread, G thread and NPT thread are available.

Pressure chart

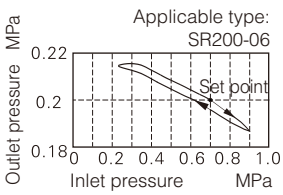

Flow chart

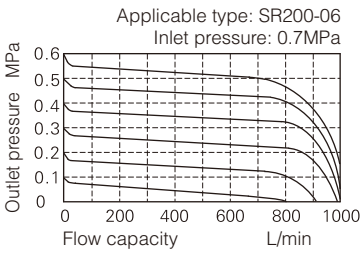

Dimensions

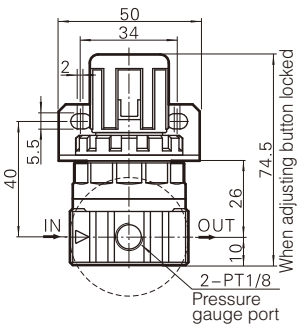

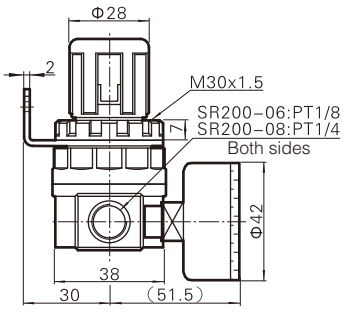



Symbol

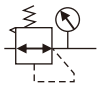

Product feature

1. Back pressure structure, compact type, cost-effective, installation time saving.
2. Broad regulating range; low-pressure type is optional applicable to situation which has low expectation on output pressure but high expectation on performance and cost-effectiveness.
3. Single unit installation; easy to mount.

Ordering code

SDR 2000 08 L □ □ 1 □

Model

SDR	SDR Series Regulator

Series code

100	100 Series
200	200 Series

Port size

Series	Port size
100	M5: M5
	06: 1/8"
200	06: 1/8"
	08: 1/4"

Type code

Blank	Standard
L	Lower pressure

Accessories

Blank	Bracket
J	No bracket(standard configuration)

Pressure gauge

Blank	Pressure gauge
N	No pressure gauge

Scale

1	Mpa
2	psi
3	bar
4	Double scale(psi、kgf/cm²)

Thread type

Blank	PT
G	G
T	NPT

Specification

Model	SDR100-M5	SDR100-06	SDR200-06	SDR200-08	SDR100L-M5	SDR100L-06	SDR200L-06	SDR200L-08
Fluid	Air							
Pressure range	0.05~0.9MPa(7~130psi)				0.03~0.4MPa(4~57psi)			
Max. pressure	1.0MPa(145psi)							
Proof pressure	1.5MPa(215psi)							
Temperature range	-20~70℃							
Pirt size	M5	PT1/8		PT1/4	M5	PT1/8		PT1/4

① PT thread, G thread and NPT thread are available.

Inner structure and material of major prats

SDR200

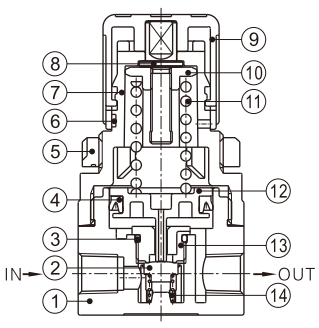

No.	Item	Material
1	Body	Aluminum alloy
2	Needle gasket	NBR
3	O-ring	NBR
4	O-ring	NBR
5	Fixed ring	POM
6	Identification ring	POM
7	Adjusting seat	POM
8	Adjusting pillar	Brass
9	Adjusting button	POM
10	Adjusting nut	Steel
11	Adjusting spring	SWC
12	Piston rode	POM
13	Adjusting seat	POM
14	Return spring	SUS304

Pressure chart

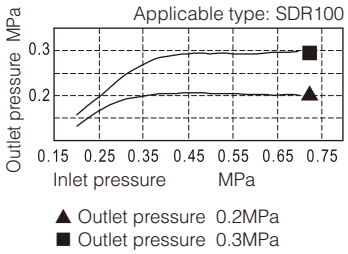

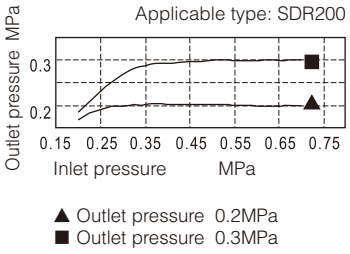

Flow chart

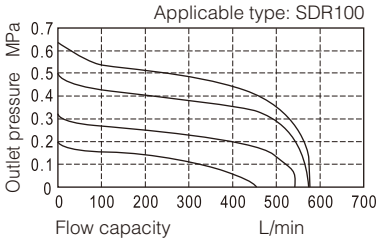

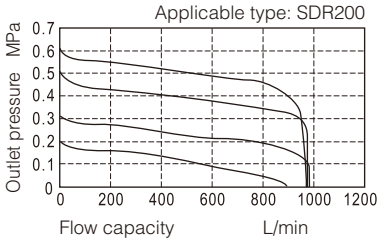

Dimensions

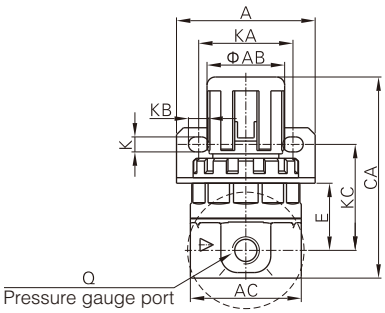

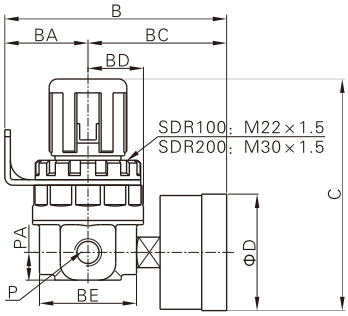

Model\Item	A	AB	AC	B	BA	BC	BD	BE	C	CA	D	E	K	KA	KB	KC	P	PA	Q
SDR100□M5	35	20	32	65.5	26	39.5	14.5	29	62.5	54.5	33	17	5.5	22	7	29	M5	7.5	PT1/16
SDR100□06	35	20	32	65.5	26	39.5	14.5	29	62.5	54.5	33	17	5.5	22	7	29	PT1/8	7.5	PT1/16
SDR200□06	50	28	40	80	30	50	20	35	83.5	72.5	42	24	5.5	34	7.5	38	PT1/8	10	PT1/8
SDR200□08	50	28	40	80	30	50	20	35	83.5	72.5	42	24	5.5	34	7.5	38	PT1/4	10	PT1/8

Note: Bracket and pressure gauge are optional.

Attentions of application



Unlock the regulating knob before pressure adjustment, then lock it after the adjustment. Otherwise, may cause the regulating knob damage or the outlet pressure change.

1. Pull the regulating knob to unlock, when the orange marking ring below the regulating knob appears, indicating that the regulating knob is unlocked.
2. Push the regulating knob to lock, when the orange marking ring below the regulating knob disappears completely, indicating that the regulating knob is locked.



Symbol

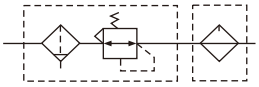

Ordering code

AC **2000** **02** **D**

Model

AC	A Series F.R.L unit

Series code

1000	1000 Series
2000	2000 Series
3000	3000 Series
4000	4000 Series
5000	5000 Series

Port size

M5	M5
02	1/4"
03	3/8"
04	1/2"
06	3/4"
10	1"

Drain method

Blank	Manual drain
A	Semi-auto drain
D	Automatic drain

Specification

Model		AC1000-M5	AC2000-02	AC3000-02	AC3000-03	AC4000-03	AC4000-04	AC4000-06	AC5000-06	AC5000-10
	Automatic drain	AC1000-M5D	AC2000-02D	AC3000-02D	AC3000-03D	AC4000-03D	AC4000-04D	AC4000-06D	AC5000-06D	AC5000-10D
Port size		M5×8	1/4	1/4	3/8	3/8	1/2	3/4	3/4	1
Pressure gauge size		1/16	1/8	1/8	1/8	1/4	1/4	1/4	1/4	1/4
Rated flow(L\min)		90	500	2000	2000	4000	4000	4500	5000	5000
Proof pressure		1.5MPa{15.3kgf/cm^2}								
Max. pressure		1.0MPa{10.2kgf/cm^2}								
Temperature range		5~60℃								
Filtering grade		5μm								
Recommended oil		Turbine No. 1 oil ISO VG32								
Cup material		Polycarbonate								
Cup protective cover		AC1000~2000(Without) AC3000~5000(With)								
Pressure range		AC1000: 0.05-0.7MPa(0.51~7.1kgf/cm^2); AC2000~5000: 0.05~0.85MPa(0.51~8.7kgf/cm^2)								
Valve type		With overflow								
Assembly	Filter	AF1000	AF2000	AF3000	AF3000	AF4000	AF4000	AF4000	AF5000	AF5000
	Regulator	AR1000	AR2000	AR3000	AR3000	AR4000	AR4000	AR4000	AR5000	AR5000
	Lubricator	AL1000	AL2000	AL3000	AL3000	AL4000	AL4000	AL4000	AL5000	AL5000
Weight(kg)		0.26	0.74	1.18	1.18	2.14	2.14	2.47	3.82	3.82

Note: 1. there are 2, 10, 20, 40, 70, 100μm to choose from.
2. Standard automatic drainage for normally open(N.O.), AC3000~5000 also has normally closed(N.C.)to choose from, and the lowest use pressure: normally open -0.1MPa(1kgf/cm^2), normally closed -0.15MPa(1.5kgf/cm^2).
3. Supply pressure is 0.7MPa(7.1kgf/cm^2)case.

Dimensions

AC1000-2000

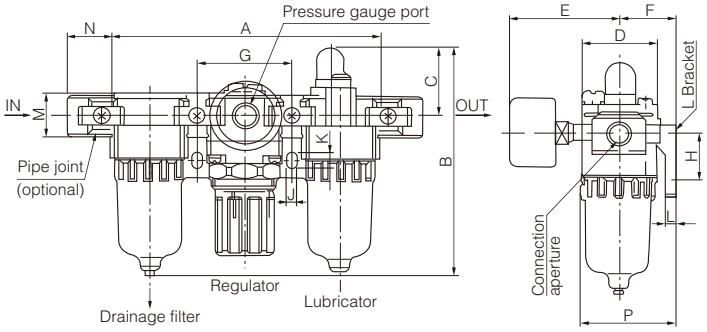

AC3000-5000

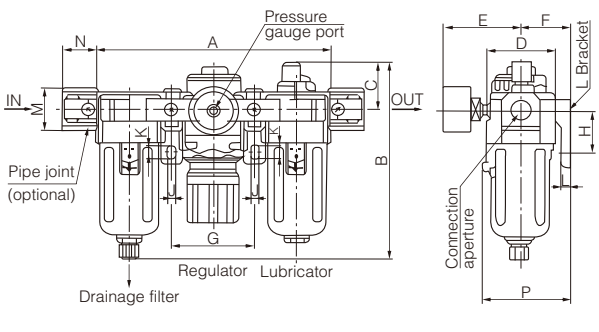

Model	Port size	A	B	C	D	E	F	G	H	J	K	L	M	N	P	B(Automatic drain)
AC1000	M5×0.8	91	84.5	25.5	25	26	25	33	20	4.5	7.5	5	17.5	16	38.5	105
AC2000	1/4	140	125	38	40	56.8	30	50	24	5.5	8.5	5	22	23	50	147.5
AC3000	1/4·3/8	181	156.5	38	53	60.8	41	64	35	7	11	7	34.2	26	70.5	194
AC4000	3/8·1/2	238	191.5	41	70	65.5	50	84	40	9	13	7	42.2	33	88	229
AC4000-06	3/4	253	193	40.5	70	69.5	50	89	40	9	13	7	46.2	36	88	230.5
AC5000	3/4·1	300	271.5	48	90	75.5	70	105	50	12	16	10	55.2	40	115	309.5



Symbol

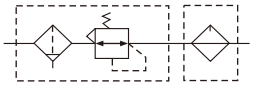

Ordering code

AC — **2010** — **02** — **D**

Model

AC	A Series FR.L unit

Series code

1010	1000 Series
2010	2000 Series
3010	3000 Series
4010	4000 Series
5010	5000 Series

Port size

M5	M5
02	1/4"
03	3/8"
04	1/2"
06	3/4"
10	1"

Drain method

Blank	Manual drain
A	Semi-auto drain
D	Automatic drain

Specification

Model		AC1010-M5	AC2010-02	AC3010-02	AC3010-03	AC4010-03	AC4010-04	AC4010-06	AC5010-06	AC5010-10
	Automatic drain	AC1010-M5D	AC2010-02D	AC3010-02D	AC3010-03D	AC4010-03D	AC4010-04D	AC4010-06D	AC5010-06D	AC5010-10D
Port size		M5×8	1/4	1/4	3/8	3/8	1/2	3/4	3/4	1
Pressure gauge size		1/16	1/8	1/8	1/8	1/8	1/4	1/4	1/4	1/4
Rated flow(L\min)		90	500	1700	1700	3000	3000	3000	4000	4000
Proof pressure		1.5MPa{15.3kgf/cm²}								
Max. pressure		1.0MPa{10.2kgf/cm²}								
Temperature range		5~60℃								
Filtering grade		5μm								
Recommended oil		Turbine No. 1 oil ISO VG32								
Cup material		Polycarbonate								
Cup protective cover		AC1010~2010(Without) AC3010~5010(With)								
Pressure range		AC1010: 0.05-0.7MPa(0.51~7.1kgf/cm²); AC2010~5010: 0.05~0.85MPa(0.51~8.7kgf/cm²)								
Valve type		With overflow								
Assembly	Filter regulator	AW1000	AW2000	AF3000	AF3000	AF4000	AF4000	AF4000	AF5000	AF5000
	Lubricator	AL1000	AL2000	AL3000	AL3000	AL4000	AL4000	AL4000	AL5000	AL5000
Weight(kg)		0.22	0.66	0.98	0.98	1.93	1.93	1.99	3.2	3.2

Note: 1. there are 2, 10, 20, 40, 70, 100μm to choose from.
2. Standard automatic drainage for normally open(N.O.), AC3010~5010 also has normally closed(N.C.)to choose from, and the lowest use pressure: normally open -0.1MPa(1kgf/cm²), normally closed -0.15MPa(1.5kgf/cm²).
3. Supply pressure is 0.7MPa(7.1kgf/cm²)case.

Dimensions

AC1010-2010

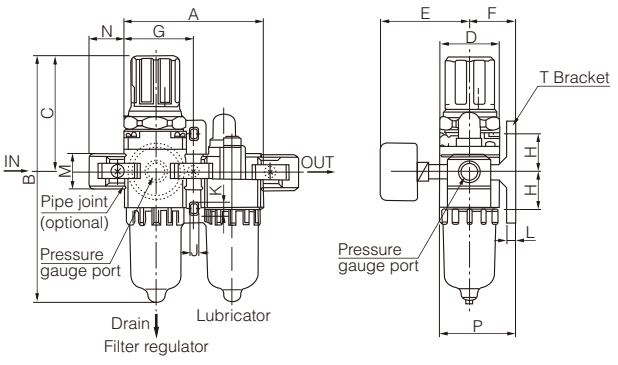

AC3010-5010

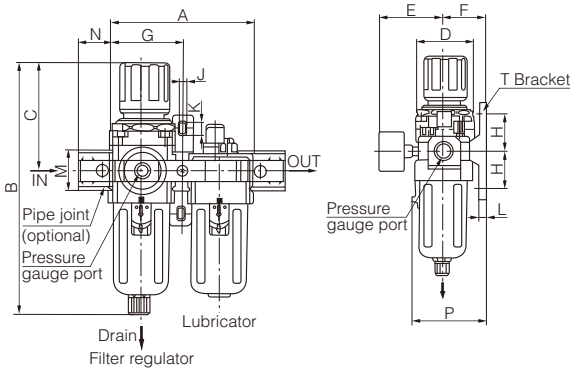

Model	Port size	A	B	C	D	E	F	G	H	J	K	L	M	N	P	B(Automatic drain)
AC1010	M5×0.8	58	109.5	50.5	25	26	25	29	20	4.5	7.5	5	17.5	16	38.5	130
AC2010	1/4	90	164.5	78	40	56.8	30	45	24	5.5	8.5	5	22	23	50	187.5
AC3010	1/4·3/8	117	211	92.5	53	60.8	41	58.5	35	7	11	7	34.2	26	70.5	248.5
AC4010	3/8·1/2	154	262.5	112	70	70.5	50	77	40	9	13	7	42.2	33	88	300
AC4010-06	3/4	164	267	114	70	70.5	50	82	40	9	13	7	46.2	36	88	304
AC5010	3/4·1	195	338	116	90	75.5	69.8	97.5	50	12	16	10.5	55.2	40	115	-



Symbol

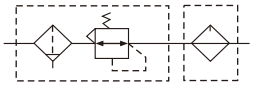

Ordering code

AW **2000** **02** **D**

Model

AW	A Series Filter & regulator

Series code

1000	1000 Series
2000	2000 Series
3000	3000 Series
4000	4000 Series
5000	5000 Series

Port size

M5	M5
02	1/4"
03	3/8"
04	1/2"
06	3/4"
10	1"

Drain method

Blank	Manual drain
A	Semi-auto drain
D	Automatic drain

Specification

Model		AW1000-M5	AW2000-02	AW3000-02	AW3000-03	AW4000-03	AW4000-04	AW4000-06	AW5000-06	AW5000-10
	Automatic drain	AW1000-M5D	AW2000-02D	AW3000-02D	AW3000-03D	AW4000-03D	AW4000-04D	AW4000-06D	AW5000-06D	AW5000-10D
Port size		M5×8	1/4	1/4	3/8	3/8	1/2	3/4	3/4	1
Pressure gauge size		1/16	1/8	1/8	1/8	1/8	1/4	1/4	1/4	1/4
Rated flow(L\min)		100	550	2000	2000	4000	4000	4500	5000	5000
Proof pressure		1.5MPa{15.3kgf/cm²}								
Max. pressure		1.0MPa{10.2kgf/cm²}								
Temperature range		5~60℃								
Filtering grade		5μm								
Recommended oil		Turbine No. 1 oil ISO VG32								
Cup material		Polycarbonate								
Cup protective cover		AW1000~2000(Without) AW3000~5000(With)								
Pressure range		AW1000: 0.05-0.7MPa(0.51~7.1kgf/cm²); AW2000~5000: 0.05~0.85MPa(0.51~8.7kgf/cm²)								
Valve type		With overflow								
Assembly	Manual drain	C100F	C200F	C300F	C300F	C400F	C400F	-	-	-
	Automatic drain	AD61	AD62	AD43	AD43	AD44	AD44	-	-	-
Weight(kg)		0.09	0.36	0.56	0.56	1.15	1.15	1.21	1.7	1.7

Note: 1. there are 2, 10, 20, 40, 70, 100μm to choose from.
2. Standard automatic drainage for normally open(N.O.), AW3000~5000 also has normally closed(N.C.)to choose from, and the lowest use pressure: normally open -0.1MPa(1kgf/cm²), normally closed -0.15MPa(1.5kgf/cm²).
3. Supply pressure is 0.7MPa(7.1kgf/cm²)case.

Main parts

No.	Name	Material			Note
		AW1000~2000	AW3000	AW4000/AW4000-06	
1	Valve body	Zinc die casting	Aluminum die casting	Aluminum die casting	Platinum Plated Silver
2	Valve cover	Metaldehyde		Aluminum die casting	Black plated

Parts list

No.	Parts name	Material	Parts No.				
			AW1000	AW2000	AW3000	AW4000	AW4000-06
3	Valve assembly	Brass NBR					
4	Filter	Resin					
5	Partition	ABS					
6	Diaphragm assembly	NBR					
7	Deflector	ABS					
8	Cup assembly	Polycarbonate					
9	Valve spring	Stainless steel					
10	Shell O seal ring	NBR					
11	Valve type O sealing ring	NBR					
12	MY type seal ring	NBR					
13	O type seal ring	NBR					

Inner structure

AW1000

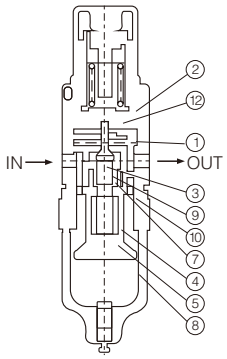

AW2000

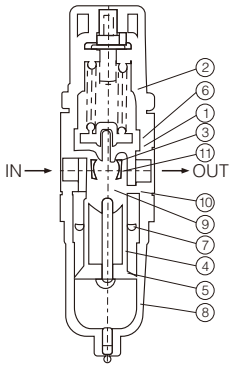

AW3000\4000

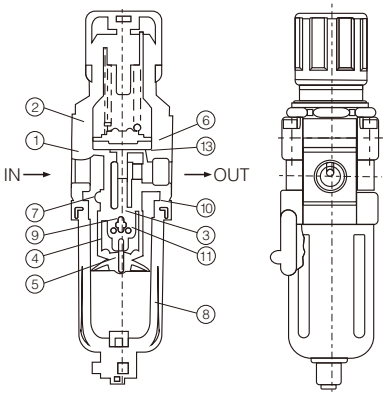

Dimensions

AW1000~2000

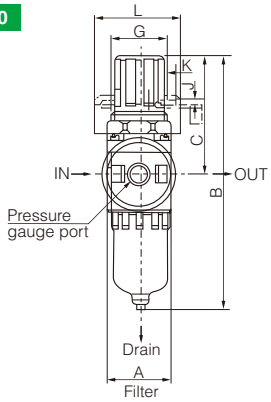

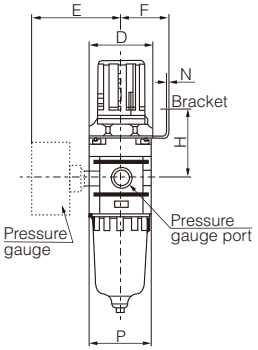

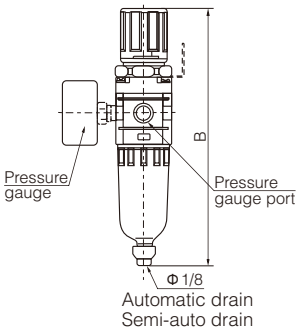

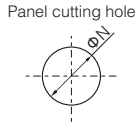

AW3000~5000

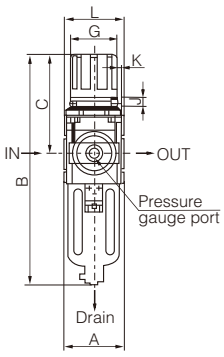

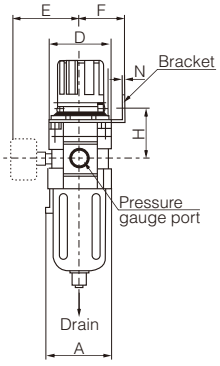

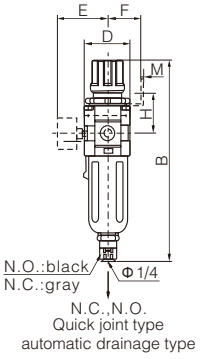

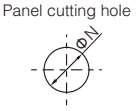

Model	Port size	A	B	C	D	E	F	G	H	J	K	L	M	N	P	B(Automatic drain)
AW1000	M5×0.8	25	109.5	50.5	25	26	25	28	30	4.5	6.5	40	2.0	20.5	28	130
AW2000	1/4	40	164.5	78	40	56.8	30	30	45	5.4	15.4	55	2.3	33.5	40	187.5
AW3000	1/4·3/8	53	211	92.5	53	60.8	41	40	46	6.5	8.0	53	2.3	42.5	56	248.5
AW4000	3/8·1/2	70	262.5	112	70	70.5	50	54	54	8.5	10.5	70	2.3	52.5	73	300
AW4000-06	3/4	75	267	114	70	70.5	50	54	56	8.5	10.5	70	2.3	52.5	73	304
AW5000	3/4·1	90	338	116	90	75.5	49.2	54	62	8.5	10.5	70	2.3	52.5	90	-



Symbol

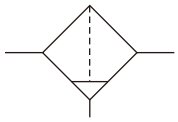

Ordering code

AF — Model

AF	A Series Filter

2000 — Series code

1000	1000 Series
2000	2000 Series
3000	3000 Series
4000	4000 Series
5000	5000 Series

02 — Port size

M5	M5
02	1/4"
03	3/8"
04	1/2"
06	3/4"
10	1"

D — Drain method

Blank	Manual drain
A	Semi-auto drain
D	Automatic drain

Specification

Model										
	Manual drain	AF1000-M5	AF2000-02	AF3000-02	AF3000-03	AF4000-03	AF4000-04	AF4000-06	AF5000-06	AF5000-10
	Automatic drain	AF1000-M5D	AF2000-02D	AF3000-02D	AF3000-03D	AF4000-03D	AF4000-04D	AF4000-06D	AF5000-06D	AF5000-10D
Port size		M5×8	1/4	1/4	3/8	3/8	1/2	3/4	3/4	1
Cup capacity		4	15	20	20	45	45	45	130	130
Rated flow(L\min)		110	750	1500	1500	4000	4000	6000	7000	7000
Proof pressure		1.5MPa{15.3kgf/cm^2}								
Max. pressure		1.0MPa{10.2kgf/cm^2}								
Temperature range		5~60℃								
Filtering grade		5μm								
Cup material		Polycarbonate								
Cup protective cover		AF1000~2000(Without) AF3000~5000(With)								
Assembly	Manual drain	C100F	C200F	C300F	C300F	C400F	C400F	C400F	C400F	C400F
	Automatic drain	AD61	AD62	AD43	AD43	AD44	AD44	AD44	AD44	AD44
Weight(kg)		0.07	0.19	0.29	0.29	0.55	0.55	0.58	1.08	1.08

Note: 1. there are 2, 10, 20, 40, 70, 100μm to choose from.
2. Standard automatic drainage for normally open(N.O.), AF3000~5000 also has normally closed(N.C.)to choose from, and the lowest use pressure: normally open -0.1MPa(1kgf/cm^2), normally closed -0.15MPa(1.5kgf/cm^2).
3. Supply pressure is 0.7MPa(7.1kgf/cm^2)case.

Main parts

No.	Name	Material			Note
		AF1000~2000	AF3000~4000\4000-06	AF5000	
1	Filter body	Zinc die casting	Aluminum die casting	Aluminum die casting	Platinum plating silvery
9	base			Aluminum die casting	Platinum plating silvery

Parts list

No.	Parts name	Material	Parts No.					
			AF1000	AF2000	AF3000	AF4000	AF4000-06	AF5000
2	Filter element	Resin						
		Copper						
3	Separator	ABS						
4	O type seal ring	NBR						
5	Cup assembly	Polycarbonate						
6	Deflector	ABS						
7	O type seal ring	NBR						
8	Washer	NBR						

Inner structure

AF1000~2000

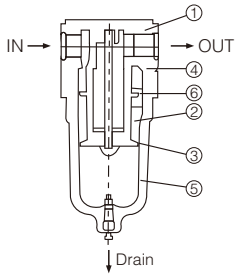

AF3000~4000

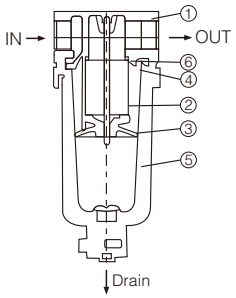

AF5000

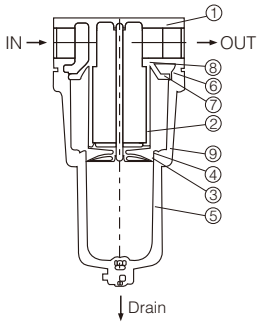

Dimensions

AF1000~2000

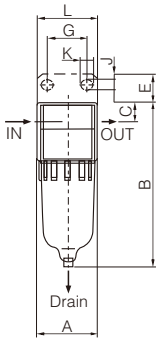

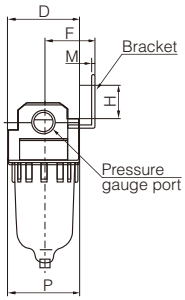

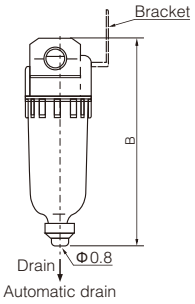

AF3000~4000

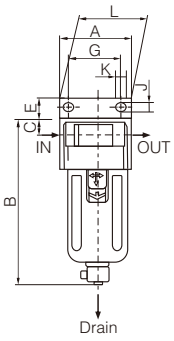

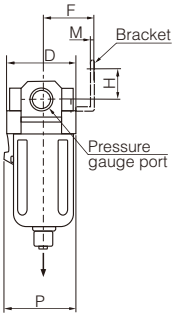

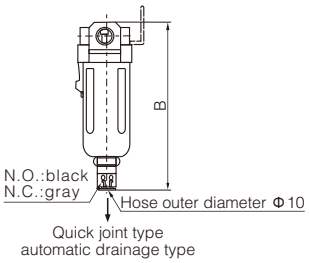

AF5000

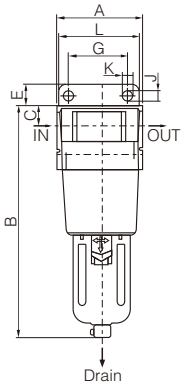

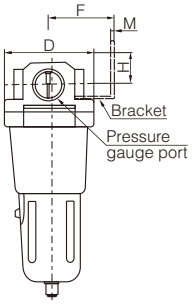

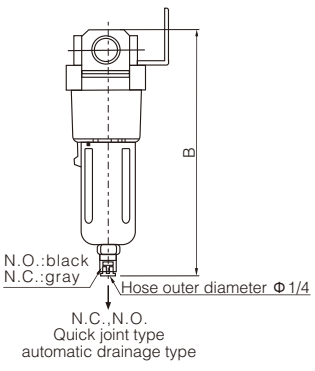

Model	Port size	A	B	C	D	E	F	G	H	J	K	L	M	P	B(Automatic drain)
Af1000	M5×0.8	25	66	7	25	-	-	-	-	-	-	-	-	26.5	86.5
AF2000	1/4	40	97.5	11	40	17	30	27	22	5.4	8.4	40	2.3	40	120.5
AF3000	1/4·3/8	53	132.5	14	53	16	41	40	23	6.5	8	53	2.3	56	170
AF4000	3/8·1/2	70	168.5	18	70	17	50	54	26	8.5	10.5	70	2.3	73	206
AF4000-06	3/4	75	172.5	20	70	14	50	54	25	8.5	10.5	70	2.3	73	210
AF5000	3/4·1	90	247.5	24	90	23	70	66	35	11	13	90	3.2	90	285.5





Symbol

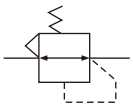

Ordering code

AR — Model

AR	A Series regulator

2000 — Series code

1000	1000 Series
2000	2000 Series
3000	3000 Series
4000	4000 Series
5000	5000 Series

02 — Port size

M5	M5
02	1/4"
03	3/8"
04	1/2"
06	3/4"
10	1"

Specification

Model	AR1000-M5	AR2000-02	AR3000-02	AR3000-03	AR4000-03	AR4000-04	AR4000-06	AR5000-06	AR5000-10
Port size	M5×8	1/4	1/4	3/8	3/8	½	3/4	3/4	1
Pressure gauge size	1/16	1/8	1/8	1/8	1/4	1/4	1/4	1/4	1/4
Rated flow(L\min)	100	550	2500	2500	6000	6000	6000	8000	8000
Proof pressure	1.5MPa{15.3kgf/cm^2}								
Max. pressure	1.0MPa{10.2kgf/cm^2}								
Temperature range	5~60℃								
Pressure range	AR1000: 0.05-0.7MPa(0.51~7.1kgf/cm^2); AR2000~5000: 0.05~0.85MPa(0.51~8.7kgf/cm^2)								
Valve type	With overflow								
Weight(kg)	0.08	0.27	0.41	0.41	0.84	0.84	0.94	1.19	1.19

Note: 1. AR2000~5000 There are Pressure range: 0.02~0.2MPa(kgf/cm^2);
2. Supply pressure of 0.7MPa(7.1kgf/cm^2, two times the pressure set to 0.5MPa(5.1kgf/cm^2)case.

Inner structure

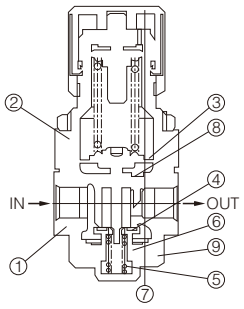

Panel cutting hole

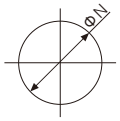

AW1000: Max thickness 3.5
AW2000: Max thickness 5

Main parts

No.	Name	Material			Note
		AR1000~2000	AR3000	AR4000/AR5000	
1	Valve body	Zinc die casting	Aluminum die casting	Aluminum die casting	Platinum Plated Silver
2	Valve cover	Metaldehyde		Aluminum die casting	Black plated

Parts list

No.	Parts name	Material	Parts No.					
			AR1000	AR2000	AR3000	AR4000	AR4000-06	AR5000
3	Diaphragm assembly	NBR						
4	Valve assembly	Brass NBR						
5	Valve spring	Stainless steel						
6	Valve type O sealing ring	NBR						
7	Piston minimum Y washer	NBR						
8	O type seal ring	NBR						
9	O type seal ring	NBR						
10	Pressure regulating spring	-						
11	Exhaust valve assembly	-						

Dimensions

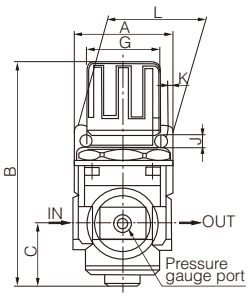

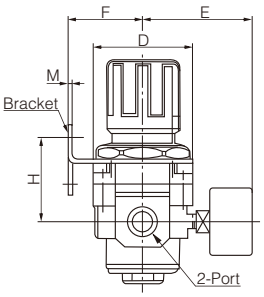

Model	Port size	A	B	C	D	E	F	G	H	J	K	L	M	N
Ar1000	M5×0.8	30	61.5	11	25	26	25	28	30	4.5	6.5	40	2.0	20.5
AR2000	1/4	40	95	17	40	56.8	30	30	45	5.4	15.4	55	2.3	33.5
AR3000	1/4·3/8	53	127.5	35	53	60.8	41	41	46	6.5	8.0	53	2.3	42.5
AR4000	3/8·1/2	70	149.5	37.5	70	65.5	50	50	54	8.5	10.5	70	2.3	52.5
AR4000-06	3/4	75	154.5	40.5	70	69.5	50	50	56	8.5	10.5	70	2.3	52.5
AR5000	3/4·1	90	168	48	90	75.5	70	70	65.8	11	13	90	3.2	52.5



Symbol

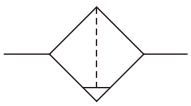

Ordering code

AL — **2000** — **02**

Model	
AL	A Series Lubricator

Series code	
1000	1000 Series
2000	2000 Series
3000	3000 Series
4000	4000 Series
5000	5000 Series

Port size	
M5	M5
02	1/4"
03	3/8"
04	1/2"
06	3/4"
10	1"

Specification

Model	AL1000-M5	AL2000-02	AL3000-02	AL3000-03	AL4000-03	AL4000-04	AL4000-06	AL5000-06	AL5000-10
Port size	M5×8	1/4	1/4	3/8	3/8	1/2	3/4	3/4	1
Cup capacity	7	25	50	50	50	130	130	130	130
Rated flow(L\min)	95	80	1700	1700	1700	5000	6300	7000	7000
Proof pressure	1.5MPa{15.3kgf/cm^2}								
Max. pressure	1.0MPa{10.2kgf/cm^2}								
Temperature range	5~60℃								
Cup material	Polycarbonate								
Cup protective cover	AL1000~2000(Without) AL3000~5000(With)								
Valve type	With overflow								
Weight(kg)	0.07	0.22	0.30	0.30	0.56	0.56	0.58	1.08	1.08

Note: 1. supply pressure is 0.5MPa (5.1kgf/cm^2), oil droplet flow rate of 5 drops/minute, turbine No.1 oil (ISO VG32) temperature of 20 degrees celsius.
2. supply pressure of 0.5MPa (5.1kgf/cm^2), 0.03MPa (0.3kgf/cm^2) in the absence of pressure.

Main parts

No.	Name	Material			Note
		AL1000~2000	AL3000~AL4000/4000-06	AL5000	
1	Oil filter body	Zinc die casting	Aluminum die casting	Aluminum die casting	Platinum Plated Silver
10	Base			Aluminum die casting	Platinum Plated Silver

Parts list

No.	Parts name	Material	Parts No.					
			AL1000	AL2000	AL3000	AL4000	AL4000-06	AL5000
2	Dome assembly	Polycarbonate						
3	Oil inlet hole assembly	-						
4	Damping duct assembly	-						
5	Needle assembly	-						
6	Cup assembly	-						
7	Cup O type sealing ring	NBR						
8	Damper	Synthetic resin						
9	Whole O type sealing ring	NBR						

Inner structure

AL1000

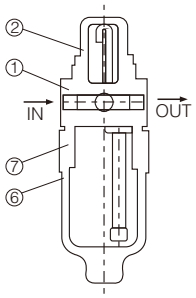

AL2000

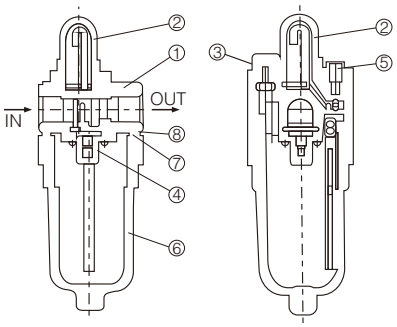

AL3000~4000

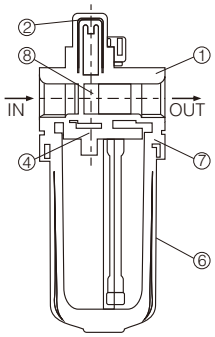

AL5000

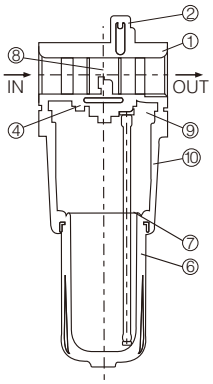

Dimensions

AL1000~2000

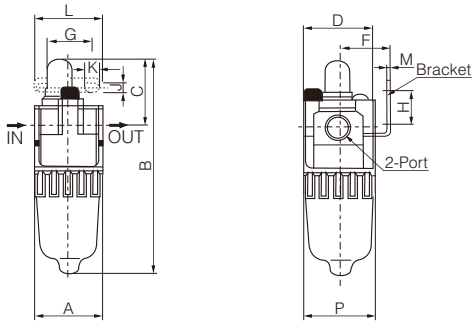

AL3000~4000

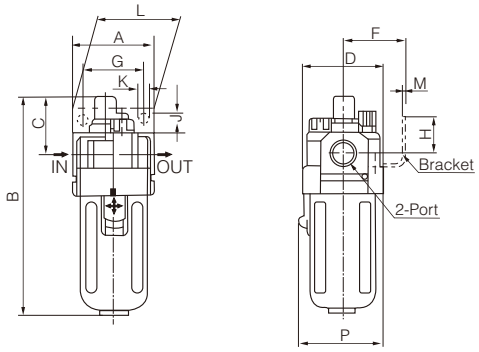

AL5000

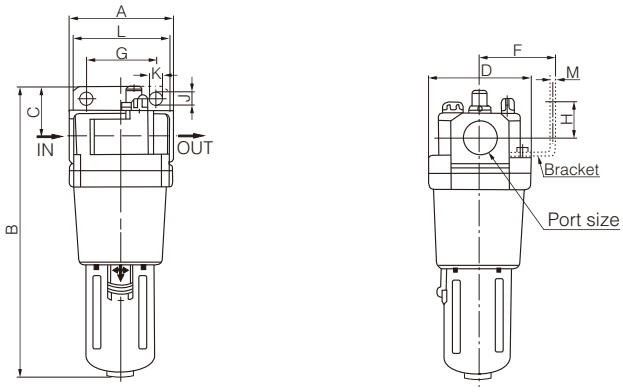

Model	Port size	A	B	C	D	E	F	G	H	J	K	L	M	P
AI1000	M5×0.8	25	81.5	25.5	25	-	-	-	-	-	-	-	-	27
AL2000	1/4	40	122	38	40	30	30	27	22	5.4	8.4	40	2.3	40
AL3000	1/4·3/8	53	142	38	53	41	41	40	23	6.5	8	53	2.3	56
AL4000	3/8·1/2	70	177	41	70	50	50	54	26	8.5	10.5	70	2.3	73
AL4000-06	3/4	75	177	39	70	50	50	54	25	8.5	10.5	70	2.3	73
AL5000	3/4·1	90	254	45	90	70	70	66	35	11	13	90	3.2	90



Symbol

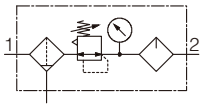

F3-...-MICRO/MINI/MIDI
Manual rotary condensate drain,
with pressur gauge

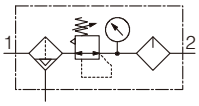

Semi or fully automatic condensate drain,
with pessure gauge

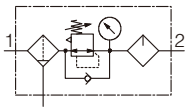

F3-...-MAXI
Manual rotary condensate drain,
with pressur gauge

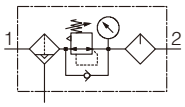

Fully automatic condensate drain,
with pressur gauge

Ordering code

F	3	□	5M	7	MINI	H	E
Series	Function Code	Port size	Grade of Filtration	Working Pressure	Size	Condensate drain	Shell material
F F Series	F.R.L. combination	G1/8"	Blank 40μm	Blank 12bar	MINI	Blank Turned manually	Blank Zinc
		G1/4"	5M 5μm	7 7bar	MIDI	H Semi-automatic	E Alu.
		G3/8"			MAXI	A Fully automatic	
		G1/2"					
		G3/4"					
		G1"					

Installation and use

The F3 consisted of F+R+L, each unit can be ordered separately. The F with water separator cleans the compressed air of fluid oil, condensation and dirt particles. For special applicaton, the standard 40μm filter element may easily be replaced by a 5μm filter element. The R maintain imputting constant operating pressure despite fluctuation in line pressure and the amount of air consumed. The proportional lubricator adds a regulated quantity of oil to the filtered air. The oil-mist content propotrional to the flow and oil can be added during operation. The oil drip tate is contr olled by the adjustable knob. Normally, 1 to 12 drops/1000L of the air is suffecient.

Specification

Size		Micro					Mini			Midi				Maxi		
Pneumatic connection		M5	M7	G1/8	QS4	QS6	G1/8	G1/4	G3/8	G1/4	G3/8	G1/2	G3/4	G1/2	G3/4	G1
Operating medium		Compressed air														
Design		Filter regulator, with/without pressure gauge														
		Proportional standard mist lubricator														
Type of mounting		Via accessories														
		In-line installation														
Assembly position		Vertical ±5°														
Regulator lock		Rotary knob with lock														
		-					Rotary knob with lock									
Grade of filtration (m)		5					5(or)40							0.4		
Max. hysteresis (bar)		0.3					0.2									
Pressure regulation range (bar)		0.5...7					0.5...7									
							0.5...12									
Pressure indication		Via pressure gauge														
		M5 Prepared					G1/8 Prepared			G1/4 Prepared				G1/4 Prepared		
Max. condensate volume (cm^3)		3					22			43				80		
Input pressure (bar)																
Condensate drain	Turnde manually	1...10					2...16									
	Semi-automatic	1...10					-									
	Fully automatic	-					2...12									

Inner structure

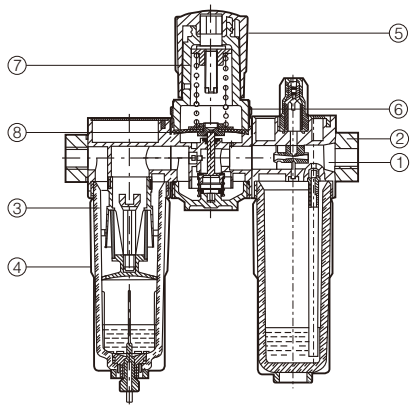

No.	Item	Material
1	Casing	Die-casting Zinc Alloy
2	Connecting Plate	Die-casting Aluminum Alloy
3	Filter Bowl	Polycarbonate
4	Protecting Cover	Aluminum
5	Adjustable knob	POM
6	Knurled Nut	Aluminum
7	Valve Cover	POM
8	Diaphragm	NBR
	Seal	NBR

Standard Flow Rate qn as Function of The Outpt Pressure p2

F3-1/4-MINI

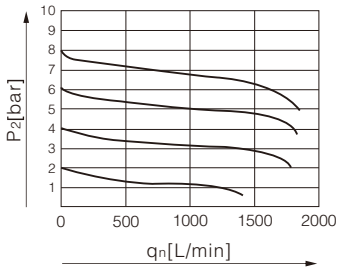

F3-1/2-MIDI

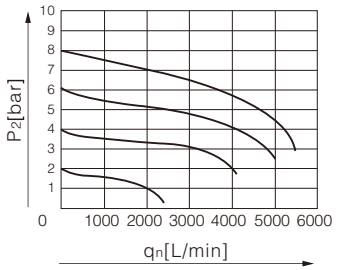

F3-1-MAXI

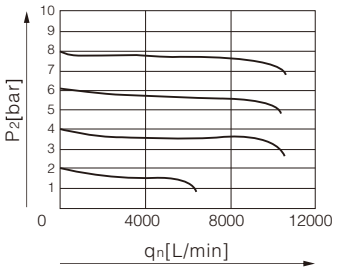

Input pressure: p1=10bar

Dimensions

Micro

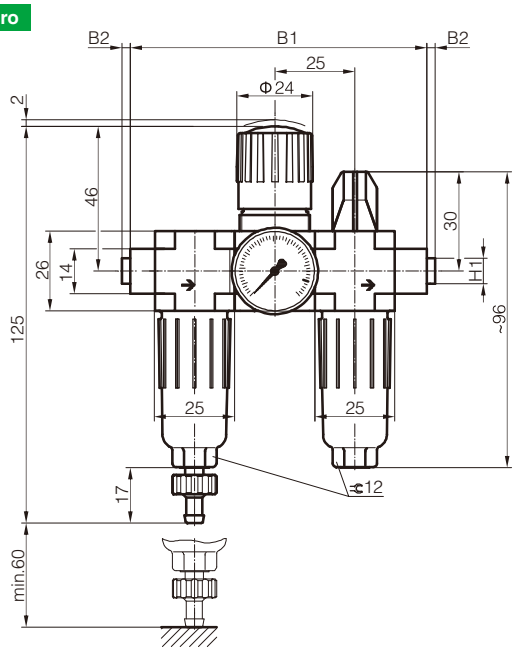

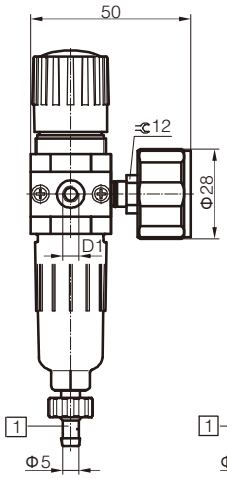

Turned manually condensate drain

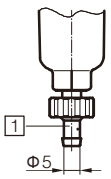

Semi-automatic condensate drain

[1] Barbed fitting for plastic tubing type PCN-4

➔ Flow direction

Model	B1	B2	D1	H1
F3-M5-D-7-5M-MICRO(H)	75	-	M5	-
F3-M7-D-7-5M-MICRO(H)B			M7	
F3-1/8-D-7-5M-MICRO(H)	95		G1/8	
F3-QS4-D-7-5M-MICRO(H)		~2.5	QS4	~8
F3-QS6-D-7-5M-MICRO(H)			QS6	~10

Mini/Midi/Maxi

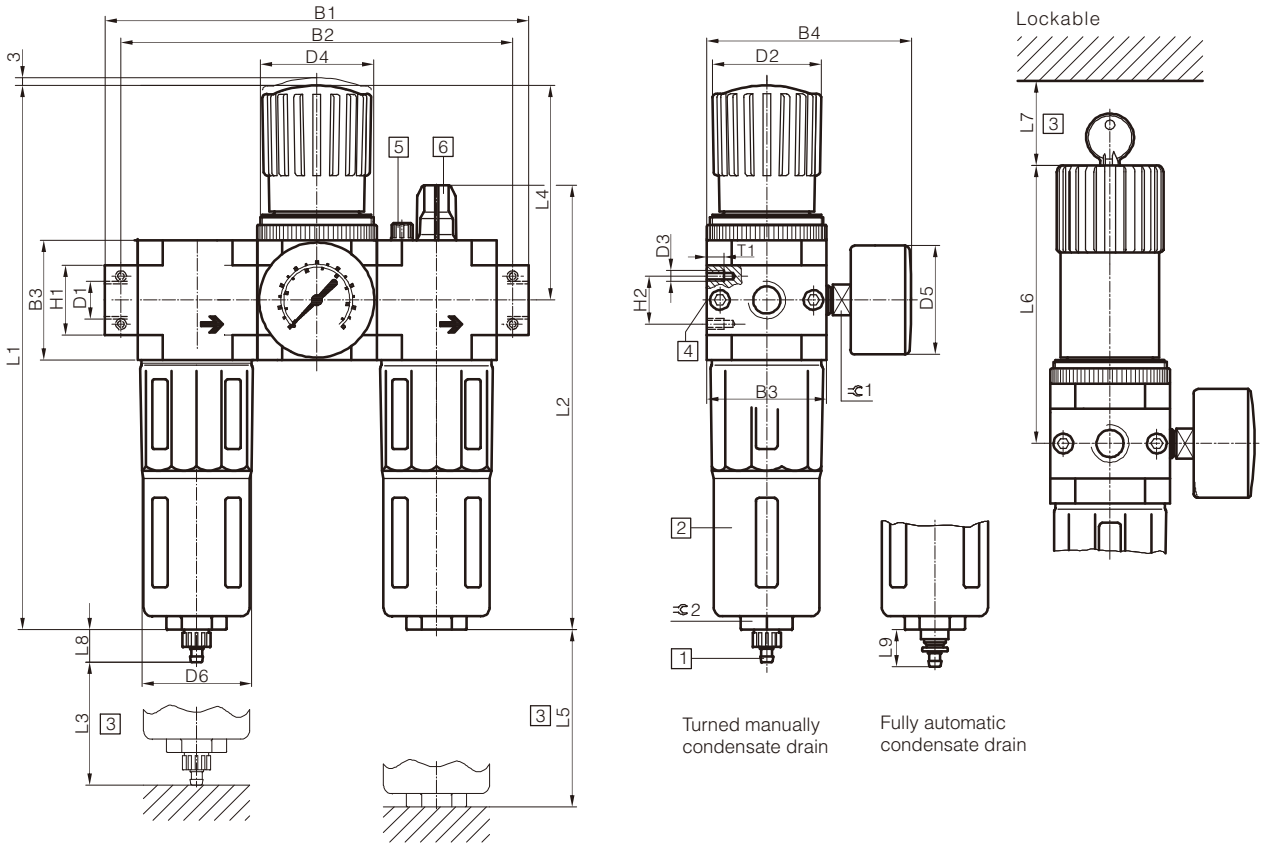

[1] Barbde fitting for plastic tubing type PCN-4 [2] Metal bowl guard [3] Installation dimensions ➔ Flow direction

[4] Second pressure gauge connection [5] Bleed screw for oil reservoir [6] Oil adjusting screw

Model	B1	B2	B3	B4	D1	D2Φ	D3	D4	D5Φ	D6Φ	H1	H2	L1	L2	L3	L4	L5	L6	L7	L8	L9	T1	≈1	≈2
Mini																								
F3-1/8-D-MINI	144	120	40	76	G1/8	31	M4	M36×1.5	41	38	20	11	193	169	60	69	100	98	60	15	19	7	14	22
F3-1/4-D-MINI					G1/4																			
F3-3/8-D-MINI	150				G3/8																			
Midi																								
F3-1/4-D-MIDI	195	165	55	95	G1/4	50	M5	M52×1.5	50	52	32	22	250	204	80	99	120	130	60	15	19	8	14	24
F3-3/8-D-MIDI					G3/8																			
F3-1/2-D-MIDI					G1/2																			
F3-3/4-D-MIDI					G3/4																			
Maxi																								
F3-1/2-D-MAXL	228	198	66	107	G1/2	31	M5	M36×1.5	50	65	32	22	252	228	90	82	150	111	60	15	19	8	14	24
F3-1/2-D-DI-MAXL						49		M52×1.5					275			105		135						
F3-3/4-D-MAXL					G3/4	31		M36×1.5					252			82		111						
F3-3/4-D-DI-MAXL						49		M52×1.5					275			105		135						
F3-1-D-MAXL	248				G1	31		M36×1.5			40		252			82		111						
F3-1-D-DI-MAXL						49		M52×1.5					275			105		135						

Note: This product conforms with ISO 1179-1 standard and the ISO 228-1 standard.



Symbol

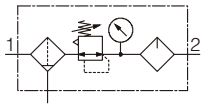

F2-...-MICRO/MINI/MIDI
Manual rotary condensate drain,
with pressur gauge

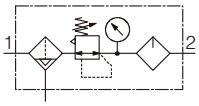

Semi or fully automatic condensate drain,
with pessure gauge

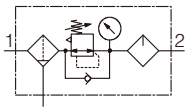

F2-...-MAXI
Manual rotary condensate drain,
with pressur gauge

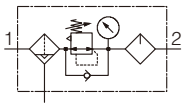

Fully automatic condensate drain,
with pressur gauge

Ordering code

F	2	□	5M	7	MINI	H	E
Series	**Function Code**	**Port size**	**Grade of Filtration**	**Working Pressure**	**Size**	**Condensate drain**	**Shell material**
F F Series	FR.L. combination	G1/8"	Blank 40μm	Blank 12bar	MINI	Blank Turned manually	Blank Zinc
		G1/4"	5M 5μm	7 7bar	MIDI	H Semi-automatic	E Alu.
		G3/8"			MAXI	A Fully automatic	
		G1/2"					
		G3/4"					
		G1"					

Installation and use

The F2 consisted of F1 and L, each unit can be ordered separately. The F with water separator cleans the compressed air of fluid oil, condensation and dirt particles. For special applicaton, the standard 40μm filter element may easily be replaced by a 5μm filter element. The R maintain imputting constant operating pressure despite fluctuation in line pressure and the amount of air consumed. The proportional lubricator adds a regulated quantity of oil to the filtered air. The oil-mist content propotrional to the flow and oil can be added during operation. The oil drip tate is contr olled by the adjustable knob. Normally, 1 to 12 drops/1000L of the air is suffecient.

Specification

Size		Micro					Mini			Midi				Maxi		
Pneumatic connection		M5	M7	G1/8	QS4	QS6	G1/8	G1/4	G3/8	G1/4	G3/8	G1/2	G3/4	G1/2	G3/4	G1
Operating medium		Compressed air														
Design		Filter regulator, with/without pressure gauge														
		Proportional standard mist lubricator														
Type of mounting		Via accessories														
		In-line installation														
Assembly position		Vertical ±5°														
Regulator lock		Rotary knob with lock														
		-					Rotary knob with lock									
Grade of filtration (m)		5					5(or)40							0.4		
Max. hysteresis (bar)		0.3					0.2									
Pressure regulation range (bar)		0.5…7					0.5…7									
							0.5…12									
Pressure indication		Via pressure gauge														
		M5 Prepared					G1/8 Prepared			G1/4 Prepared				G1/4 Prepared		
Max. condensate volume (cm^3)		3					22			43				80		
Input pressure (bar)																
Condensate drain	Turnde manually	1…10					2…16									
	Semi-automatic	1…10					-									
	Fully automatic	-					2…12									

Inner structure

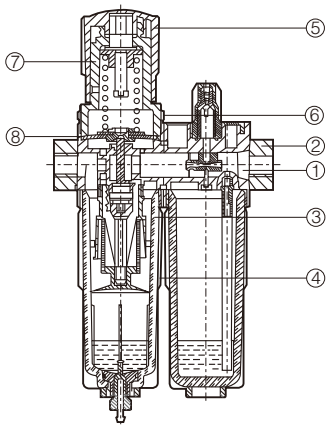

No.	Item	Material
1	Casing	Die-casting Zinc Alloy
2	Connecting Plate	Die-casting Aluminum Alloy
3	Filter Bowl	Polycarbonate
4	Protecting Cover	Aluminum
5	Adjustable knob	POM
6	Knurled Nut	Aluminum
7	Valve Cover	POM
8	Diaphragm	NBR
	Seal	NBR

Standard Flow Rate qn as Function of The Outpt Pressure p2

F2-1/4-MINI

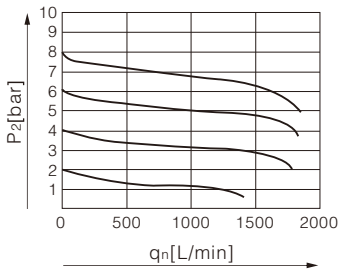

F2-1/2-MIDI

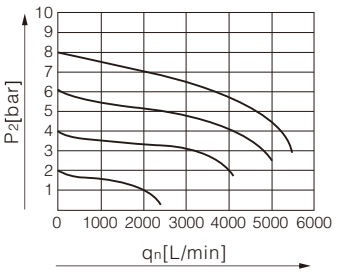

F2-1-MAXI

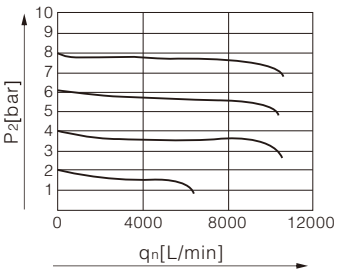

Input pressure: p1=10bar

Dimensions

Micro

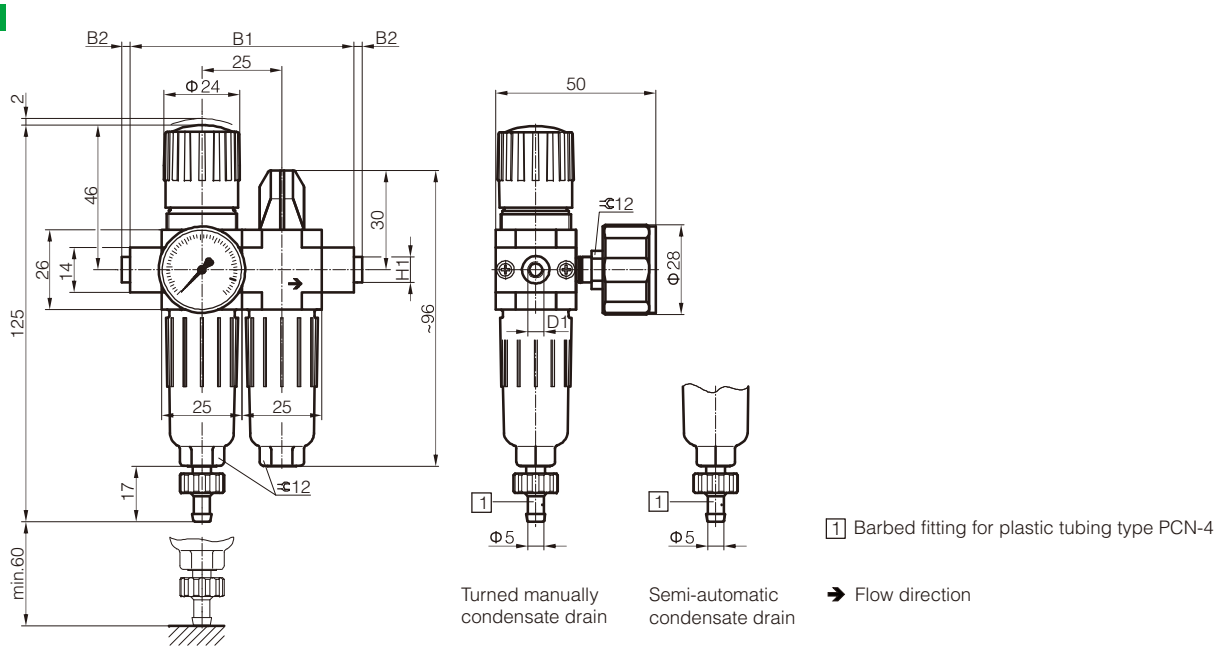

Turned manually condensate drain

Semi-automatic condensate drain

[1] Barbed fitting for plastic tubing type PCN-4

➔ Flow direction

Model	B1	B2	D1	H1
F2-M5-D-7-5M-MICRO(H)	50	-	M5	-
F2-M7-D-7-5M-MICRO(H)B			M7	
F2-1/8-D-7-5M-MICRO(H)	70		G1/8	
F2-QS4-D-7-5M-MICRO(H)		~2.5	QS4	~8
F2-QS6-D-7-5M-MICRO(H)			QS6	~10

Mini/Midi/Maxi

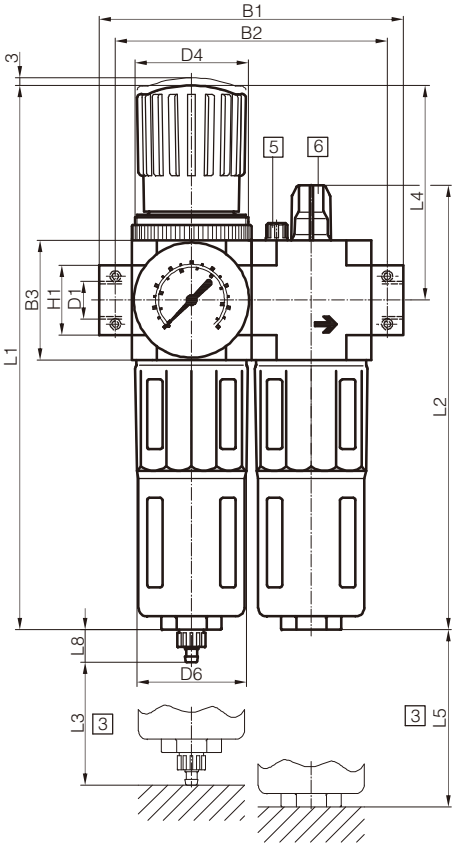

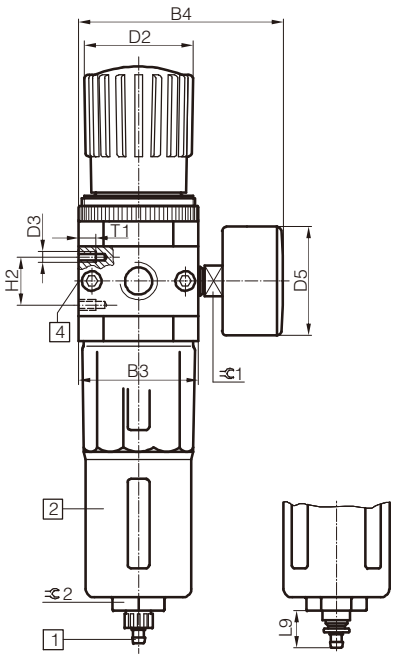

Turned manually condensate drain

Fully automatic condensate drain

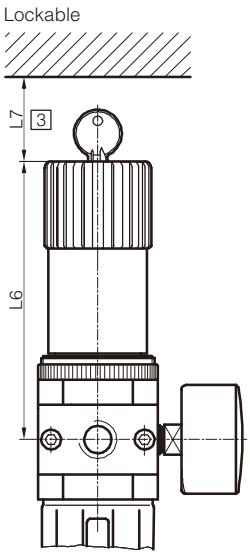

[1] Barbde fitting for plastic tubing type PCN-4
[2] Metal bowl guard
[3] Installation dimensions
➔ Flow direction
[4] Second pressure gauge connection
[5] Bleed screw for oil reservoir
[6] Oil adjusting screw

Model	B1	B2	B3	B4	D1	D2Φ	D3	D4	D5Φ	D6Φ	H1	H2	L1	L2	L3	L4	L5	L6	L7	L8	L9	T1	⌀1	⌀2
Mini																								
F2-1/8-D-MINI	104	92	40	76	G1/8	31	M4	M36×1.5	41	38	20	11	193	169	60	69	100	98	60	15	19	7	14	22
F2-1/4-D-MINI					G1/4																			
F2-3/8-D-MINI	110				G3/8																			
Midi																								
F2-1/4-D-MIDI	140	125	55	95	G1/4	50	M5	M52×1.5	50	52	32	22	250	204	80	99	120	130	60	15	19	8	14	24
F2-3/8-D-MIDI					G3/8																			
F2-1/2-D-MIDI					G1/2																			
F2-3/4-D-MIDI					G3/4																			
Maxi																								
F2-1/2-D-MAXL	162	146	66	107	G1/2	31	M5	M36×1.5	50	65	32	22	252	228	90	82	150	111	60	15	19	8	14	24
F2-1/2-D-DI-MAXL						49		M52×1.5					275			105		135						
F2-3/4-D-MAXL					G3/4	31		M36×1.5					252			82		111						
F2-3/4-D-DI-MAXL						49		M52×1.5					275			105		135						
F2-1-D-MAXL	182	157			G1	31		M36×1.5			40		252			82		111						
F2-1-D-DI-MAXL						49		M52×1.5					275			105		135						

Note: This product conforms with ISO 1179-1 standard and the ISO 228-1 standard.



Symbol

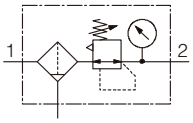

F1-...-MICRO/MINI/MIDI
Manual rotary condensate drain,
with pressur gauge

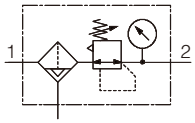

Semi or fully automatic condensate drain,
with pessure gauge

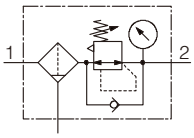

F1-...-MAXI
Manual rotary condensate drain,
with pressur gauge

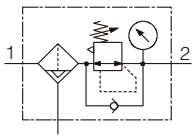

Fully automatic condensate drain,
with pressur gauge

Ordering code

F	1	□	5M	7	MINI	H	E
Series	**Function Code**	**Port size**	**Grade of Filtration**	**Working Pressure**	**Size**	**Condensate drain**	**Shell material**
F F Series	Filter & regulator	G1/8"	Blank 40μm	Blank 12bar	MINI	Blank Turned manually	Blank Zinc
		G1/4"	5M 5μm	7 7bar	MIDI	H Semi-automatic	E Alu.
		G3/8"			MAXI	A Fully automatic	
		G1/2"					
		G3/4"					
		G1"					

Installation and use

Filter and pressure regulator combine a single unit,and cleans the compressed air of fluid oil, condensation and dirt particles. For special application, the standard 40μm filter element may easliy be replaced by a 5μm filter element. The R maintain im putting constant operating pressure despite fluctuation in line pressure and the amount of air consumed.

Specification

Size		Micro					Mini			Midi				Maxi		
Pneumatic connection		M5	M7	G1/8	QS4	QS6	G1/8	G1/4	G3/8	G1/4	G3/8	G1/2	G3/4	G1/2	G3/4	G1
Operating medium		Compressed air														
Design		Filter regulator, with/without pressure gauge														
Type of mounting		Via accessories														
		In-line installation														
Assembly position		Vertical ±5°														
Regulator lock		Rotary knob with lock														
		-					Rotary knob with lock									
Grade of filtration (m)		5					5(or)40							0.4		
Max. hysteresis (bar)		0.3					0.2									
Pressure regulation range (bar)		0.5…7					0.5…7									
							0.5…12									
Pressure indication		Via pressure gauge														
		M5 Prepared					G1/8 Prepared			G1/4 Prepared				G1/4 Prepared		
Max. condensate volume (cm^3)		3					22			43				80		
Input pressure (bar)																
Condensate drain	Turnde manually	1…10					2…16									
	Semi-automatic	1…10					-									
	Fully automatic	-					2…12									

Inner structure

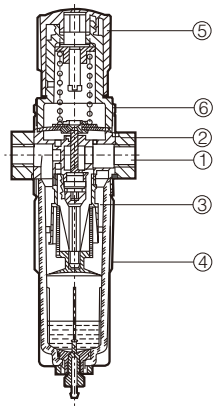

No.	Item	Material
1	Casing	Die-casting Zinc Alloy
2	Connecting Plate	Die-casting Aluminum Alloy
3	Filter Bowl	Polycarbonate
4	Protecting Cover	Aluminum
5	Adjustable knob	POM
6	Knurled Nut	Aluminum
	Seal	NBR

Standard Flow Rate qn as Function of The Outpt Pressure p2

F1-1/4-MINI

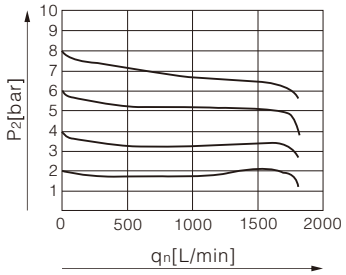

F1-1/2-MIDI

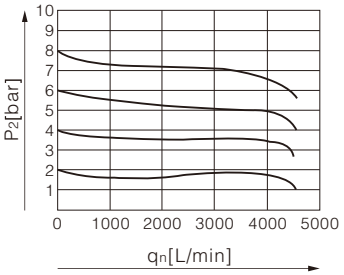

F1-1-MAXI

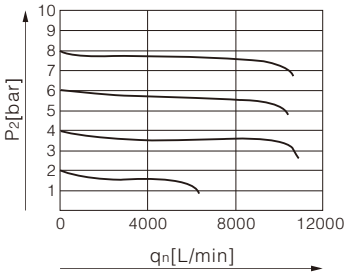

Input pressure: p1=10bar

Dimensions

Micro

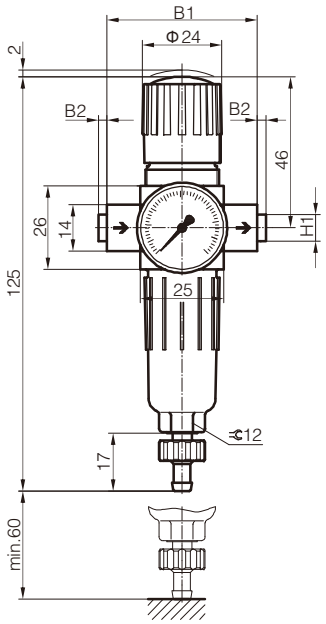

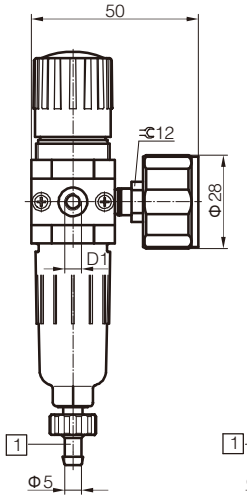

Turned manually condensate drain

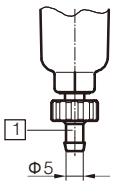

Semi-automatic condensate drain

➔ Flow direction

[1] Barbde fitting for plastic tubing type PCN–4

Model	B1	B2	D1	H1
F1-M5...-MICRO(H)	25	-	M5	-
F1-M7...-MICRO(H)B			M7	
F1-1/8...-MICRO(H)	45		G1/8	
F1-QS4...-MICRO(H)		~2.5	QS4	~8
F1-QS6...-MICRO(H)			QS6	~10

Mini/Midi/Maxi

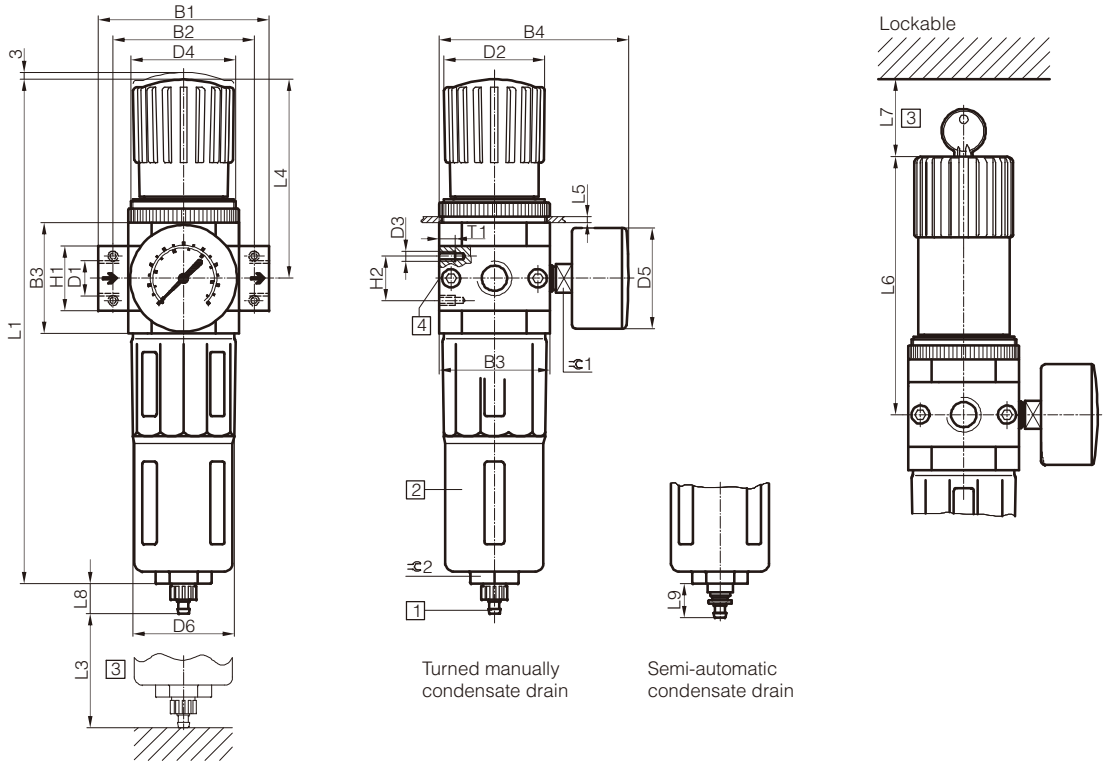

[1] Barbde fitting for plastic tubing type PCN-4

[2] Metal bowl guard

[3] Installation dimensions

[4] Second pressure gauge connection

➔ Flow direction

Model	B1	B2	B3	B4	D1	D2Φ	D3	D4	D5Φ	D6Φ	H1	H2	L1	L3	L4	L5 max.	L6	L7	L8	L9	T1	⇔1	⇔2
Mini																							
F1-1/8-D-MINI	64	52	40	76	G1/8	31	M4	M36×1.5	41	38	20	11	193	60	68	3	98	60	15	19	7	14	22
F1-1/4-D-MINI					G1/4																		
F1-3/8-D-MINI	70				G3/8																		
Midi																							
F1-1/4-D-MIDI	85	70	55	95	G1/4	50	M5	M52×1.5	50	52	32	22	250	80	99	5	130	60	15	19	8	14	24
F1-3/8-D-MIDI					G3/8																		
F1-1/2-D-MIDI					G1/2																		
F1-3/4-D-MIDI					G3/4																		
Maxi																							
F1-1/2-D-MAXL	96	80	66	107	G1/2	31	M5	M36×1.5	50	65	32	22	252	90	82	4	111	60	15	19	8	14	24
F1-1/2-D-DI-MAXL						49		M52×1.5					275		105		135						
F1-3/4-D-MAXL					G3/4	31		M36×1.5					252		82		111						
F1-3/4-D-DI-MAXL						49		M52×1.5					275		105		135						
F1-1-D-MAXL	116	91			G1	31		M36×1.5			40		252		82		111						
F1-1-D-DI-MAXL						49		M52×1.5					275		105		135						

Note: This product conforms with ISO 1179-1 standard and the ISO 228-1 standard.



Symbol

Maunal rotary condensate drain

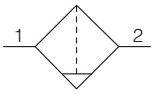

Semi or fully automatic condensate drain

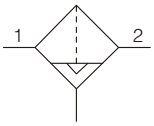

Installation and use

The F with water separator cleans the compressed air of fluid oil, condensation and dirt particles, for special application, the standar d 40μm filterelement may easily be replaced by a 5μm filter relement.

Ordering code

F	□	5M	MINI	H	E
Series	**Port size**	**Grade of Filtration**	**Size**	**Condensate drain**	**Shell material**
F Filter	G1/8"	Blank 40μm	MINI	Blank Turned manually	Blank Zinc
	G1/4"	5M 5μm	MIDI	H Semi-automatic	E Alu.
	G3/8"		MAXI	A Fully automatic	
	G1/2"				
	G3/4"				
	G1"				

Specification

Size		Micro					Mini			Midi				Maxi		
Pneumatic connection		M5	M7	G1/8	QS4	QS6	G1/8	G1/4	G3/8	G1/4	G3/8	G1/2	G3/4	G1/2	G3/4	G1
Operating medium		Compressed air														
Design		Sintered filter with centrifuagal separation														
Type of mounting		Via accessories														
		In-line installation														
Assembly position		Vertical ±5°														
Grade of filtration (m)		5					5(or)40									
Max. condensate volume (cm^3)		3					22			43				80		
Input pressure (bar)																
Condensate drain	Turnde manually	1…10					2…16									
	Semi-automatic	1…10					-									
	Fully automatic	-					2…12									

Note: This product conforms with ISO 1179-1 standard and the ISO 228-1 standard.

Standard nominal flow rate1)qnN[l/min]

Connection	Female thread		Connecting plate		
	M5	M7	G1/8	QS4	QS6
Micro					
F	170	280	290	170	280

Note: This product conforms with ISO 1179-1 standard and the ISO 228-1 standard.

Inner structure

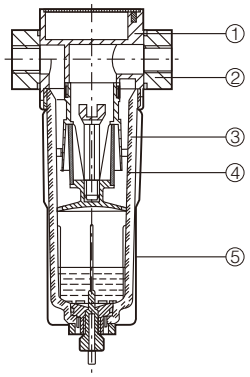

No.	Item	Material
1	Casing	Die-casting Zinc
2	Connecting Plate	Die-casting Zinc/Aluminum
3	Filter Bowl	Polycarbonate
4	Filter Element	PE
5	Metal Cover	Aluminum
	Seal	NBR

Standard Flow Rate qn as Function of The Outpt Pressure p2

F-1/4-MINI

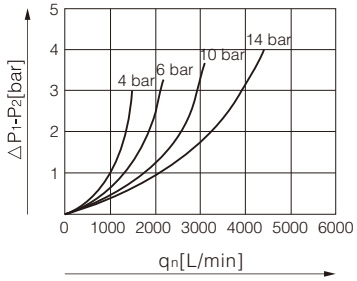

F-1/2-MIDI

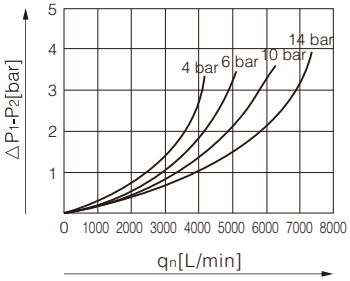

F-1-MAXI

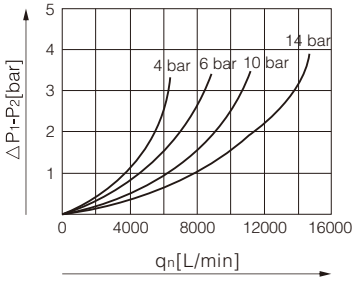

Dimensions

Micro

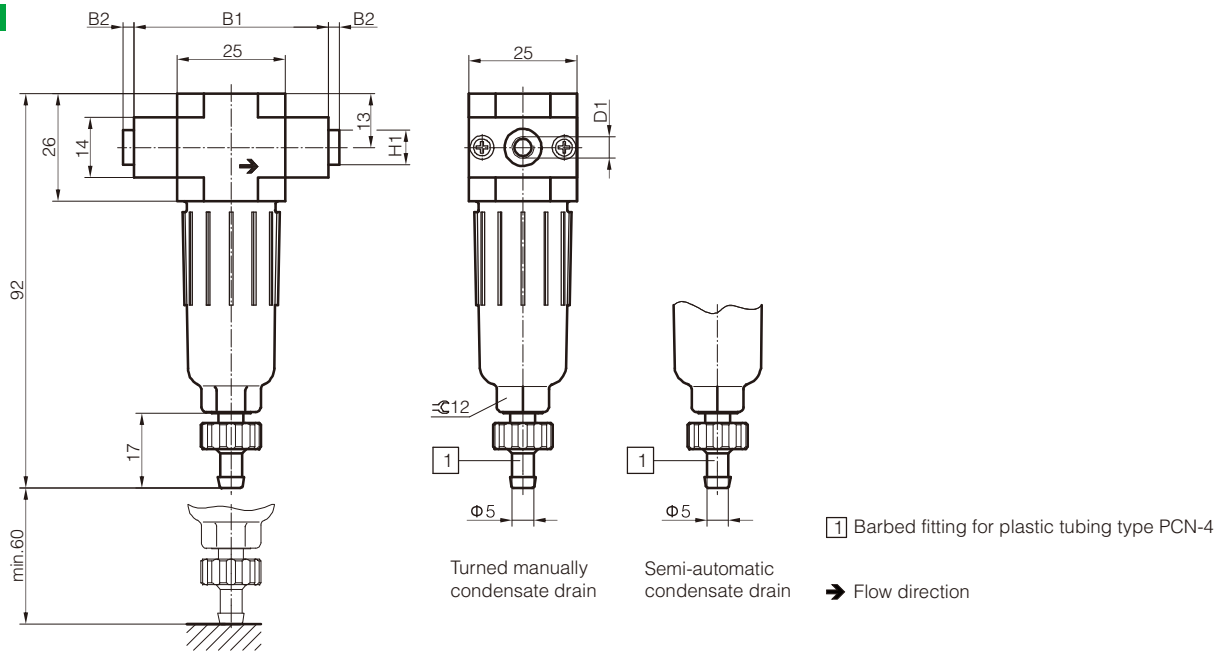

Model	B1	B2	D1	H1
F-M5-D-5M-MICRO(H)	25	-	M5	-
F-M7-D-5M-MICRO(H)B			M7	
F-1/8-D-5M-MICRO(H)	45		G1/8	
F-QS4-D-5M-MICRO(H)		~2.5	QS4	~8
F-QS6-D-5M-MICRO(H)			QS6	~10

Mini/Midi/Maxi

With threaded connectin plates

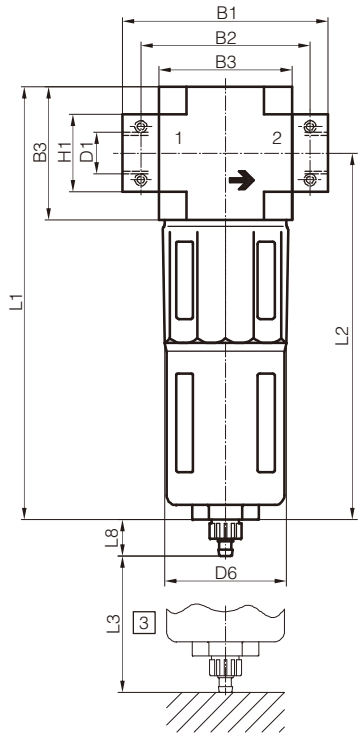

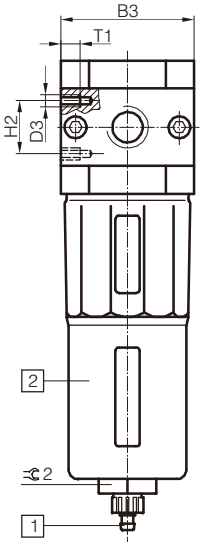

Turned manually condensate drain

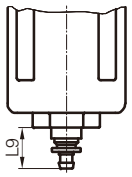

Semi-automatic condensate drain

Without threaded connecting plates

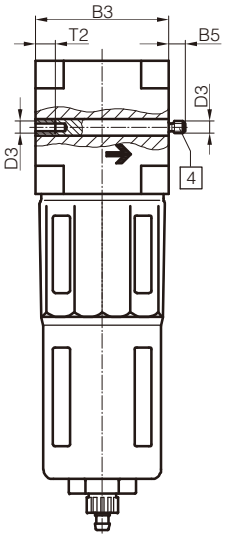

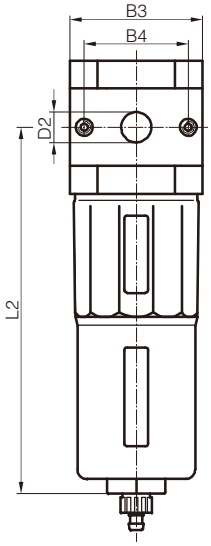

[1] Barbde fitting for plastic tubing type PCN-4

[2] Metal bowl guard

[3] Installation dimensions

[4] Threaded pin(exchangeable)

➔ Flow direction

Model	B1	B2	B3	B4	B5	D1	D2Φ	D3	D6Φ	H1	H2	L1	L2	L3	L8	L9	T1	⬡1	⬡2
Mini																			
F-1/8-D-MINI	64	52	40	30	-	G1/8	-	M4	38	20	11	144	124	60	15	19	7	-	22
F-1/4-D-MINI						G1/4													
F-3/8-D-MINII	70					G3/8													
F-D-MINI	-	-			5.8	-	11			-	-						-	10	
Midi																			
F-1/4-D-MIDI	85	70	55	43	-	G1/4	-	M5	52	32	22	179	151	80	15	19	8	-	24
F-3/8-D-MIDI						G3/8													
F-1/2-D-MIDI						G1/2													
F-3/4-D-MIDI						G3/4													
F-D-MIDI	-	-			6.8	-	24			-	-						-	11	
Maxi																			
F-1/2-D-MAXI	96	80	66	46	-	G1/2	-	M5	65	32	22	203	170	90	15	19	8	-	24
F-3/4-D-MAXI						G3/4													
F-1-D-MAXI	116	61				G1				40									
F-D-MAXI	-	-			6.8	-	30			-	-						-	11	

Note: This product conforms with ISO 1179-1 standard and the ISO 228-1 standard.



Symbol

R-...-MICRO/MINI/MIDI
Withpressur gauge

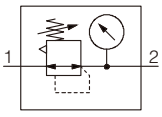

R-...-I-MINI/MIDI R-...-MAXL
Withpressur gauge

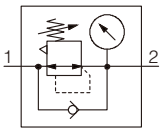

Installation and use

The R maintain im putting constant operating pressure despite fluctuation in Line pressure and the amount of air consumed.

Ordering code

R	□	7	MINI	E
Series	Port size	Working Pressure	Size	Shell material
F Regulator	G1/8" G1/2" G1/4" G3/4" G3/8" G1"	Blank 12bar 7 7bar	MINI MIDI MAXI	Blank Zinc E Alu.

Specification

Size	Micro					Mini			Midi				Maxi		
Pneumatic connection	M5	M7	G1/8	QS4	QS6	G1/8	G1/4	G3/8	G1/4	G3/8	G1/2	G3/4	G1/2	G3/4	G1
Operating medium	Compressed air					Filtered compressed air, lubricated or unlubricated, grade of filtration 40μm.									
Design	Directly actuated diaphragm regulator												Pilot actuated piston regulator Directly actuated diaphragm regulator		
Type of mounting	Via accessories														
	In-line installation														
	Front panel mounting														
Assembly position	Any														
Regulator lock	Rotary knob with lock														
	-					Rotary knob with lock									
Input pressure (bar)	1…10					1…16									
Max. hysteresis (bar)	0.3					0.2							0.4		
Pressure regulation range (bar)	0.5…7					0.5…7									
						0.5…12									
Pressure indication	Via pressure gauge														
	M5 Prepared					G1/8 Prepared			G1/4 Prepared						

Inner structure

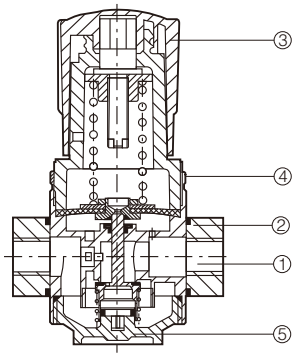

No.	Item	Material
1	Casing	Die-casting Zinc
2	Connecting Plate	Die-casting Aluminum
3	Adjustable knob	POM
4	Knurled Nut	Aluminum
5	Tigt Cover	Zinc Alloy
6	Seal	NBR

Standard Flow Rate qn as Function of The Outpt Pressure p2

R-1/4-MINI

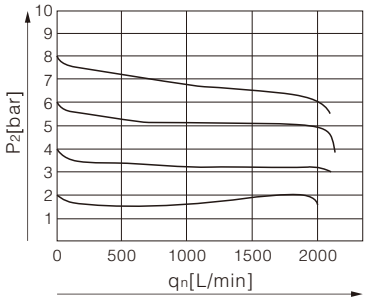

R-1/2-MIDI

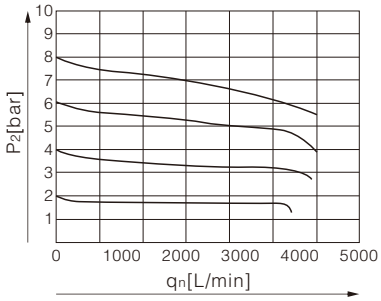

R-1-MAXI

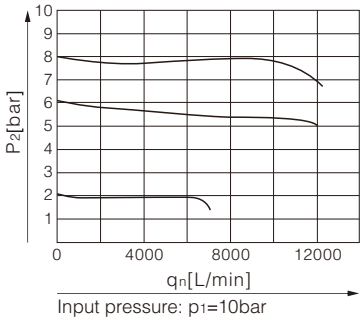

Input pressure: p1=10bar

Dimensions

Micro

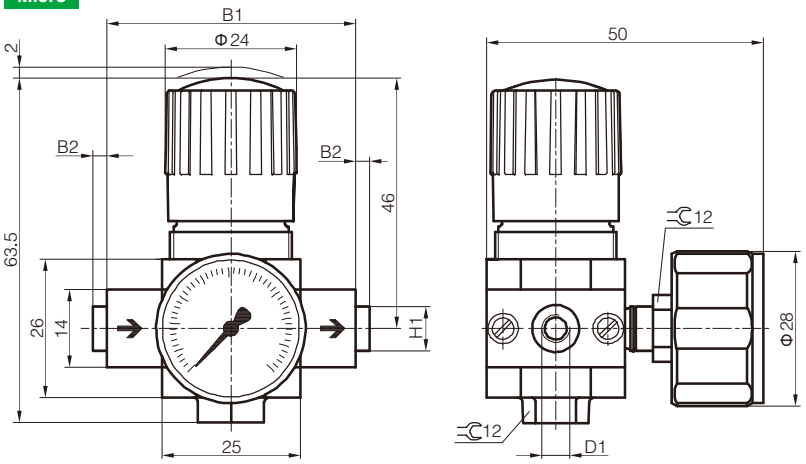

➔ Flow direction

Model	B1	B2	D1	H1
R-M5-D-7-MICRO	25	-	M5	-
R-M7-D-7-MICRO(B)			M7	
R-1/8-D-7-MICRO	45		G1/8	
R-QS4-D-7-MICRO		~2.5	QS4	~8
R-QS6-D-7-MICRO			QS6	~10

Mini/Midi/Maxi

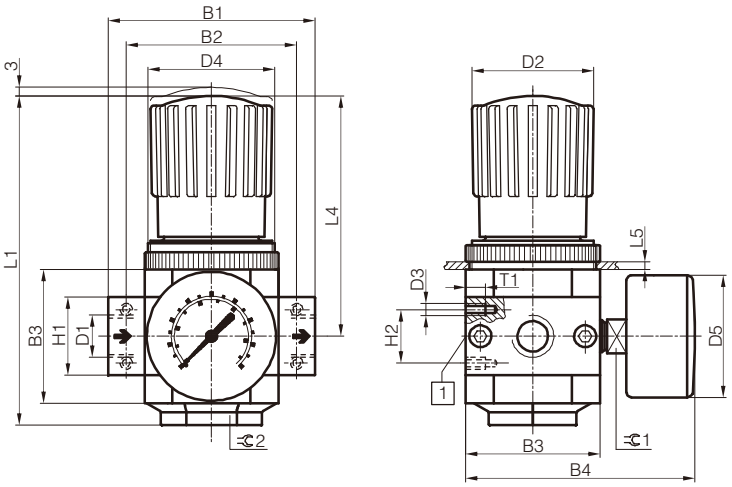

[1] Second pressure gauge connection

[3] Installation dimensions

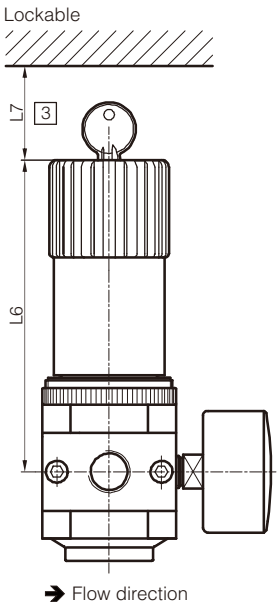

➔ Flow direction

Model	B1	B2	B3	B4	D1	D2Φ	D3	D4	D5Φ	H1	H2	L1	L4	L5 max.	L6	L7	T1	⌭1	⌭2
Mini																			
R-1/8-D(1)-MINI	64	52	40	76	G1/8	31	M4	M36×1.5	41	20	11	96	68	3	98	60	7	14	22
R-1/4-D(1)-MINI					G1/4														
R-3/8-D(1)-MINII	70				G3/8														
Midi																			
R-1/4-D(1)-MIDI	85	70	55	95	G1/4	50	M5	M52×1.5	50	32	22	135	99	5	130	60	8	14	24
R-3/8-D(1)-MIDI					G3/8														
R-1/2-D(1)-MIDI					G1/2														
R-3/4-D(1)-MIDI					G3/4														
Maxi																			
R-1/2-D-MAXL	96	80	66	107	G1/2	31	M5	M36×1.5	50	32	22	125	82	4	111	60	8	14	24
R-1/2-D-DI-MAXL						49		M52×1.5				148	105		135				
R-3/4-D-MAXL					G3/4	31		M36×1.5				125	82		111				
R-3/4-D-DI-MAXL						49		M52×1.5				148	105		135				
R-1-D-MAXL	116	91			G1	31		M36×1.5		40		125	82		111				
R-1-D-DI-MAXL						49		M52×1.5				148	105		135				

Note: This product conforms with ISO 1179-1 standard and the ISO 228-1 standard.



Symbol

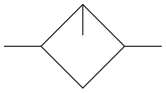

Installation and use

Automatic variable throttle mist evenly compressed air injector fog, A regulator to ensure the amount of oil mist and compressed air flow is proportional to. Compressed air through the nozzle pressure drop, forcing the fluid to enter, as the oil from the oil cup, along with the compressed air into the input port, to be atomized.

Can be achieved in the work non-stop air refueling.

By adjusting the screw to adjust the d rip volume, usually containing 1-12 drops per 1000L of air is sufficient.

Ordering code

L — **Series**

L	Lubricator

□ — **Port size**

G1/8"
G1/4"
G3/8"
G1/2"
G3/4"
G1"

7 — **Working Pressure**

Blank	12bar
7	7bar

MINI — **Size**

MINI
MIDI
MAXI

E — **Shell material**

Blank	Zinc
E	Alu.

Specification

Size	Micro					Mini			Midi				Maxi		
Pneumatic connection	M5	M7	G1/8	QS4	QS6	G1/8	G1/4	G3/8	G1/4	G3/8	G1/2	G3/4	G1/2	G3/4	G1
Operating medium	Filtered compressed air, unlubricated, grade of filtration 5μm					Filtered compressed air, unlubricated, grade of filtration 40μm									
Design	Proportional standard mist lubricator														
Type of mounting	Via accessories														
	In-line installation														
Assembly position	Vertical ±5°														
Input pressure (bar)	0…10					0…16									
Minimum flow for lubricator operation (l/min)	3					3			8				10		
Max. oil capacity (cm^3)	6.5					45			110				190		

Note: This product conforms with ISO 1179-1 standard and the ISO 228-1 standard.

Standard nominal flow rate1)qnN[l/min]

Connection	Female thread		Connecting plate		
	M5	M7	G1/8	QS4	QS6
Micro					
L	200	430	410	16	330

Note: This product conforms with ISO 1179-1 standard and the ISO 228-1 standard.

Inner structure

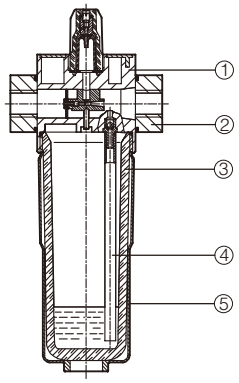

No.	Item	Material
1	Casing	Die-casting Zinc
2	Connecting Plate	Aluminum
3	Filter Bowl	Polycarbonate
4	Metal Filter	Aluminum
5	Cover, Pressure Visiable Type	PE
	Seal	NBR

Standard Flow Rate qn as Function of The Outpt Pressure p2

L-1/4-MINI

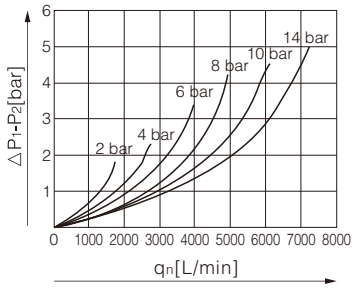

L-1/2-MIDI

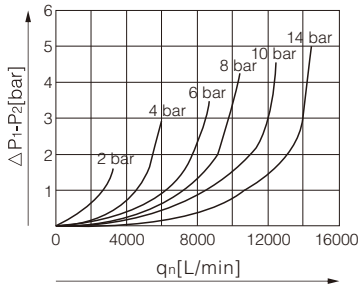

L-1-MAXI

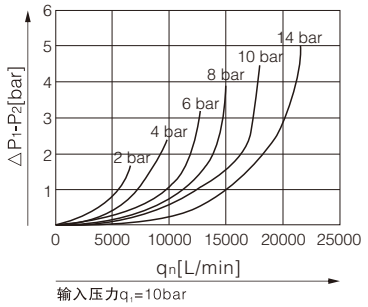

Dimensions

Micro

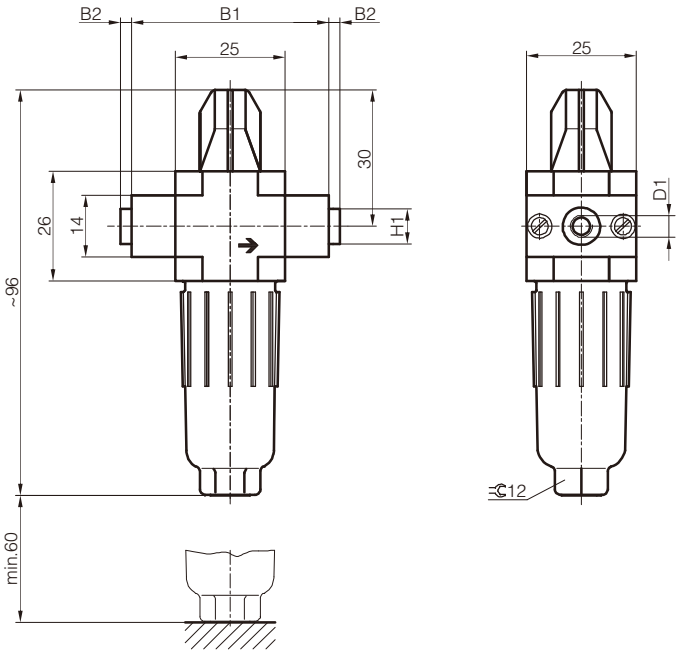

➔ Flow direction

Model	B1	B2	D1	H1
L-M5-D-MICRO	25	-	M5	-
L-M7-D-MICRO			M7	
L-1/8-D-MICRO	45		G1/8	
L-QS4-D-MICRO		~2.5	QS4	~8
L-QS6-D-MICRO			QS6	~10

Mini/Midi/Maxi

With threaded connecting plates

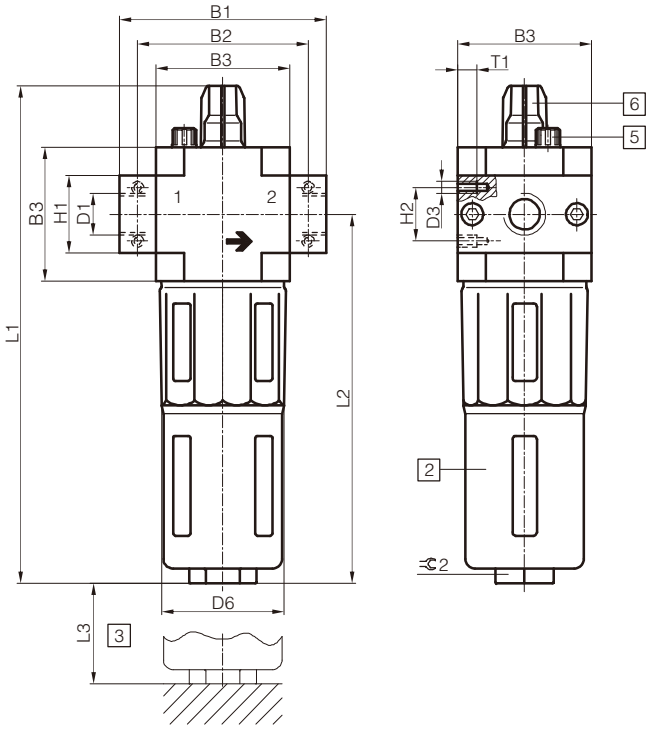

Without threaded connecting plates

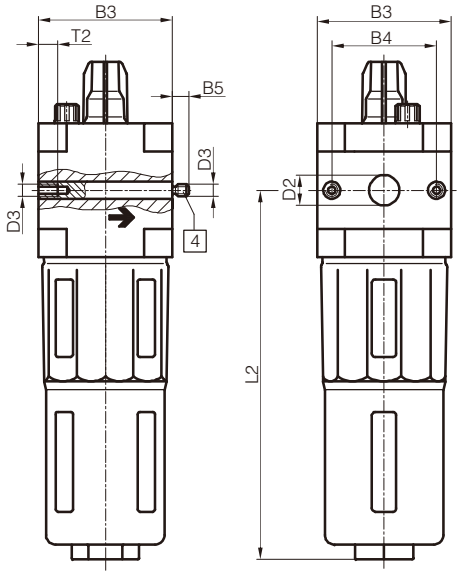

2 Metal bowl guard
4 Threaded pin (exchangeable)
5 Bleed screw for oil reservoir
➔ Flow direction
3 Installation dimensions
6 Oil adjusting screw

Model	B1	B2	B3	B4	B5	D1	D2Φ	D3	D6Φ	H1	H2	L1	L2	L3	T1	⊂1	⊂2
Mini																	
L-1/8-D-MINI	64	52	40	30	-	G1/8	-	M4	38	20	11	169	124	100	7	-	22
L-1/4-D-MINI						G1/4											
L-3/8-D-MINII	70					G3/8											
L-D-MINI	-	-			5.8	-	11			-	-				-	10	
Midi																	
L-1/4-D-MIDI	85	70	55	43	-	G1/4	-	M5	52	32	22	204	151	120	8	-	24
L-3/8-D-MIDI						G3/8											
L-1/2-D-MIDI						G1/2											
L-3/4-D-MIDI						G3/4											
L-D-MIDI	-	-			6.8	-	24			-	-				-	11	
Maxi																	
L-1/2-D-MAXI	96	80	66	46	-	G1/2	-	M5	65	32	22	228	170	150	8	-	24
L-3/4-D-MAXI						G3/4											
L-1-D-MAXI	116	61				G1				40							
L-D-MAXI	-	-			6.8	-	30			-	-				-	11	

Note: This product conforms with ISO 1179-1 standard and the ISO 228-1 standard.



Symbol

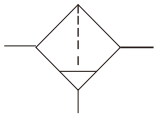

Ordering code

Q	SL	20
Series cord	Function cord	Port size

Q	Q Series air treatment component

SL	Air filter

20	Port size
6	1/8"
8	1/4"
10	3/8"
15	1/2"
20	3/4"
25	1"
40	1½"

Specification

Model	QSL-6	QSL-8	QSL-10	QSL-15	QSL-20	QSL-25	QSL-40
Working temperature	5~60℃						
Nominal primary pressure	1.0MPa						
Filtrations	50-70μm						
Effective drain	≥85%						

Pressure drop-air flow rate meter

Model	Reduced pressure is measured under thecondition of 5% of the primary pressureairlow-rate of all primary pressure will not less the value as following.				
	Air flow-rate(L/min)				
	Prinmry pressure(MPa)				
	0.25	0.4	0.63	0.8	1.0
QSL-6	200	290	450	360	680
QSL-8	450	720	1100	1460	700
QSL-10	760	1170	1620	2000	2340
QSL-15	1170	1460	2340	2700	3420
QSL-20	1700	2800	4000	4600	5400
QSL-25	2100	3420	5200	5800	6800
QSL-40	2500	4020	6400	7000	8200

Dimensions

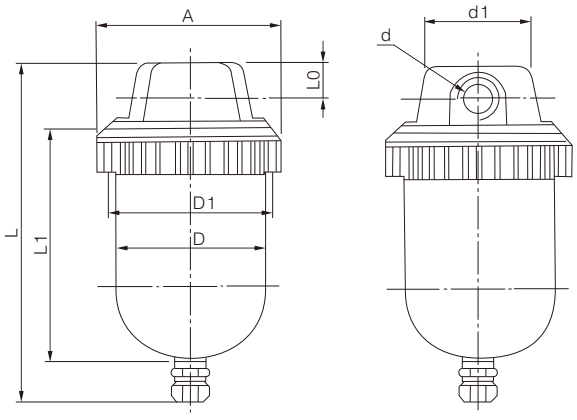

Model	Port size d	A	ΦD	ΦD1	Φd1	L0	L1	L≈
QSL-6	PT1/8	90	70	88	55	15	114	160
QSL-8	PT1/4							
QSL-10	PT3/8							
QSL-15	PT1/2							
QSL-20	PT3/4	115	90	112	65	23	152	234
QSL-25	PT1							
QSL-40	PT1½	130	90	130	92	34	228	310



Symbol

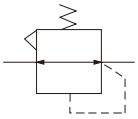

Ordering code

Q	TY	20
Series cord	Function cord	Port size

Q	Q Series air treatment component

TY	Regulator

Port size	
6	1/8"
8	1/4"
10	3/8"
15	1/2"
20	3/4"
25	1"
40	1½"

Specification

Model	QTY-6	QTY-8	QTY-10	QTY-15	QTY-20	QTY-25	QTY-40
Working temperature	5~60℃						
Nominal primary pressure	1.0MPa						
Proof pressure	1.5MPa						
Max. adjusted range	0.05~0.63MPa						

Pressure drop-air flow rate meter

Model	The primary pressure is 1MPa, the secondary pressure is reduced to 0.05MPa the max flow-rate will not less than the following value.			
	Air flow-rate(L/min)			
	Prinmry pressure(MPa)			
	0.25	0.4	0.63	0.8
QTY-6	100	120	160	190
QTY-8	680	770	860	900
QTY-10	720	860	1000	1100
QTY-15	900	1100	1200	1300
QTY-20	1650	1800	1980	2100
QTY-25	1900	2250	2450	2650
QTY-40	2150	4020	2920	3200

Dimensions

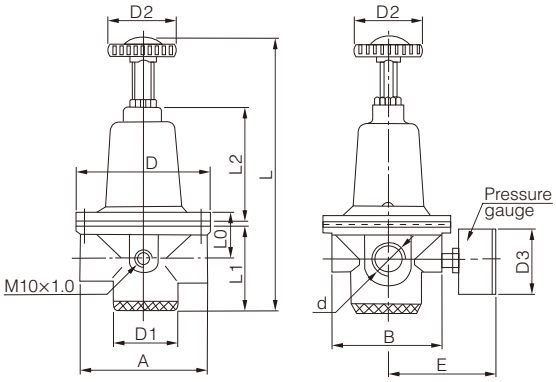

Model	Port size d	A	ΦD	ΦD1	ΦD2	ΦD3	L0	L1	L2	E	Lmax
QTY-6	PT1/8	80	64	80	40	58	16	52	69	80	173
QTY-8	PT1/4										
QTY-10	PT3/8										
QTY-15	PT1/2	80	64	80	40	58	21	58	69	80	181
QTY-20	PT3/4	108	105	120	50	58	30	78	108	100	250
QTY-25	PT1										
QTY-40	PT1½	136	104	120	50	58	40	100	108	100	280



Symbol

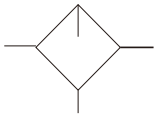

Ordering code

Q	IU	20
Series cord	Function cord	Port size

Q	Q Series air treatment component

IU	Lubricator

20	Port size
6	1/8"
8	1/4"
10	3/8"
15	1/2"
20	3/4"
25	1"
40	1½"

Specification

Model	QIU-6	QIU-8	QIU-10	QIU15	QIU-20	QIU-25	QIU-40
Working temperature	5~60℃						
Nominal primary pressure	1.0MPa						
Oiling pressure under air unstopped conditionl	⩾0.1MPa						
Life(ten thousands times)	⩾100						

Pressure drop-air flow rate meter

Model	Min it is should not be smaller than the follwing value min to haze the air discharg				
	Prinmry pressure(MPa)				
	0.25	0.4	0.63	0.8	1.0
QIU-6	70	90	120	180	220
QIU-8	75	140	220	240	300
QIU-10	120	190	300	400	470
QIU-15	140	350	480	630	650
QIU-20	350	750	1100	1400	1500
QIU-25	600	1200	1600	1800	2100
QIU-40	850	1650	2100	2200	2700

Dimensions

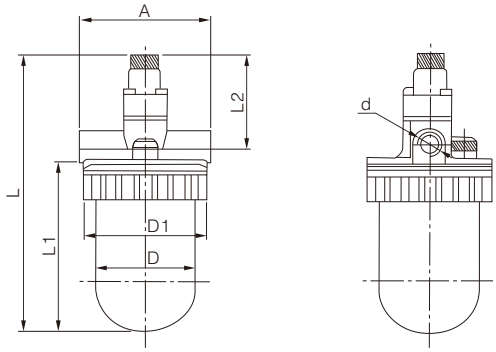

Model	Port size d	A	ΦD	ΦD1	L1	L2	L≈
QSL-6	PT1/8	90	70	88	114	69	173
QSL-8	PT1/4						
QSL-10	PT3/8						
QSL-15	PT1/2						
QSL-20	PT3/4	115	90	110	115	74	250
QSL-25	PT1						
QSL-40	PT1½	130	90	110	163	60	280



Stainless Steel



Aluminium

Symbol

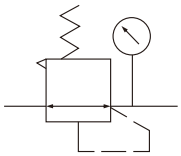

Ordering code

QTYH – □ – 15

Model

QTYH	High pressure regulator

Material and use

Blank	Aluminium
SF	Stainless steel food industry
SC	Corrosive environmentl

Port size

08	G1/4"	25	G1"
10	G3/8"	32	G1¼"
15	G1/2"	40	G1½"
20	G3/4"	50	G2"

Specification

Model	QTYH-08	QTYH-10	QTYH-15	QTYH-20	QTYH-25	QTYH-32	QTYH-40	QTYH-50
Operating fluid	Air or inert gases							
Joint pipe bore	G1/4	G3/8	G1/2	G3/4	G1	G1¼	G1½	G2
Range of adjustable pressure	0.05MPa~3.5MPa							
Max. input pressure	4MPa							
Operating temperature range	-25~80℃							

Dimensions

QTYH-08\10\15

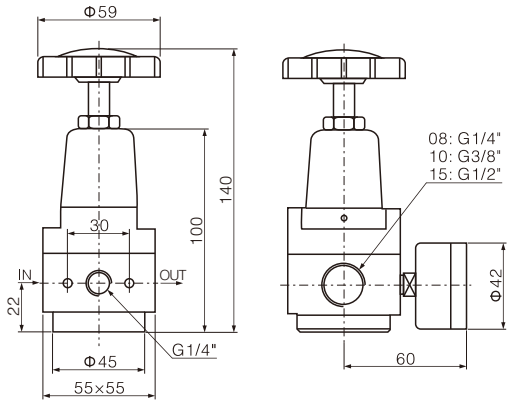

QTYH-20\25

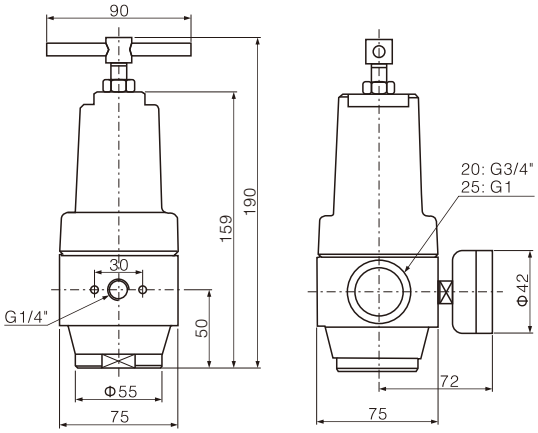

QTYH-SF/SC-08/10/15

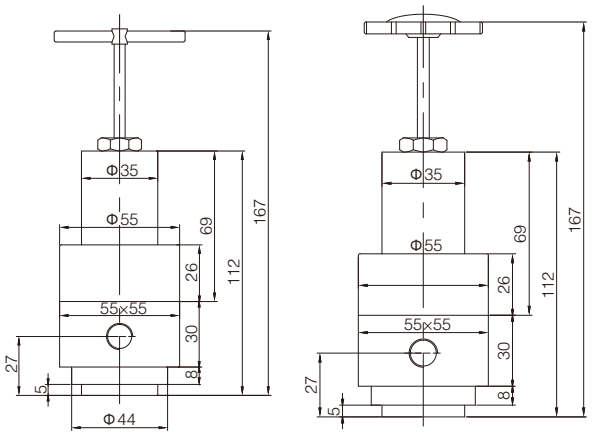

QTYH-SF/SC-20/25

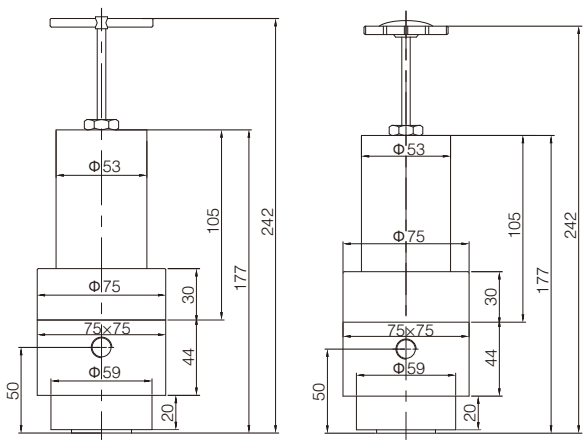



Ordering code

QSLH – □ – 15

Model	
QFRH	High pressure fitter

S	Stainless steel
Blank	Aluminium

Port size

08	G1/4"	25	G1"
10	G3/8"	32	G1¼"
15	G1/2"	40	G1½"
20	G3/4"	50	G2"

Symbol

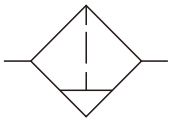

Dimensions

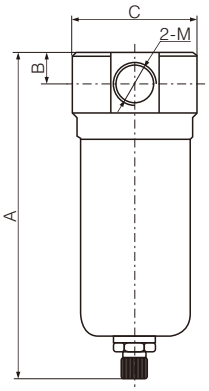

Bore	A	B	C	M
10	160	15	60	G3/8
15	160	15	60	G1/2
20	215	75	90	G3/4
25	215	75	90	G1

Specification

Model	QFLH-08	QFLH-10	QFLH-15	QFLH-20	QFLH-25	QFLH-32	QFLH-40	QFLH-50
Operating fluid	Air or inert gases							
Joint pipe bore	G1/4	G3/8	G1/2	G3/4	G1	G1¼	G1½	G2
Filter precision	20μm or 40μm							
Range of adjustable pressure	0.15~4.0MPa							
Max. input pressure	4MPa							
Operating temperatuer range	5~80℃							

QFRH Series High Pressure Fitter & Regulator



Ordering code

QFRH – □ – 15

Model	
QFRH	High pressure fitter & regulator

S	Stainless steel
Blank	Aluminium

Port size

08	G1/4"	25	G1"
10	G3/8"	32	G1¼"
15	G1/2"	40	G1½"
20	G3/4"	50	G2"

Dimensions

QFRH-15

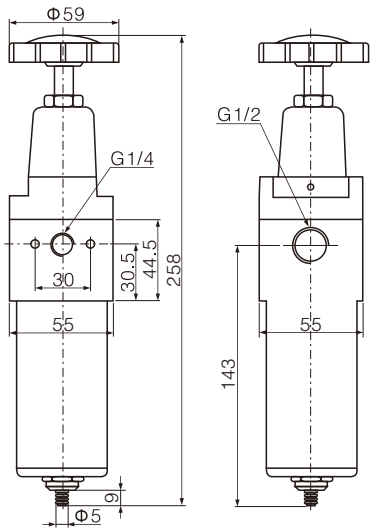

Symbol

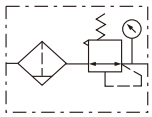

Specification

Model	QFRH-08	QFRH-10	QFRH-15	QFRH-20	QFRH-25	QFRH-32	QFRH-40	QFRH-50
Operating fluid	Air or inert gases							
Joint pipe bore	G1/4	G3/8	G1/2	G3/4	G1	G1¼	G1½	G2
Filter precision	20μm or 40μm							
Range of adjustable pressure	0.05~3.5MPa							
Max. input pressure	4MPa							
Operating temperatuer range	-25~+80℃							



Symbol

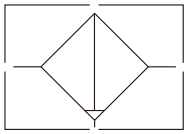

Ordering code

AFF	350	04	D
Series	Body size	Port size	Automatic drainer

Series	
AFF	Main line filter

Body size	
350	G1/2
550	G1
650	G1½

Port size	
04	G1/2
10	G1
14	G1½

Automatic drainer	
D	Automatic drain

Specification

Model	AFF350-04	AFF550-10	AFF650-14
Thread pipe	G1/2	G1	G1½
Rating flow (L/min)	1500	3700	6000
Max. working pressure	1.0MPa		
Min. working pressure	0.05MPa		
Operating temperature	-5~60℃(Not frozen)		
Filter precision	3μm(Removai 95%)		
Element lite	At press. Differential 0.1MPa		

Dimensions

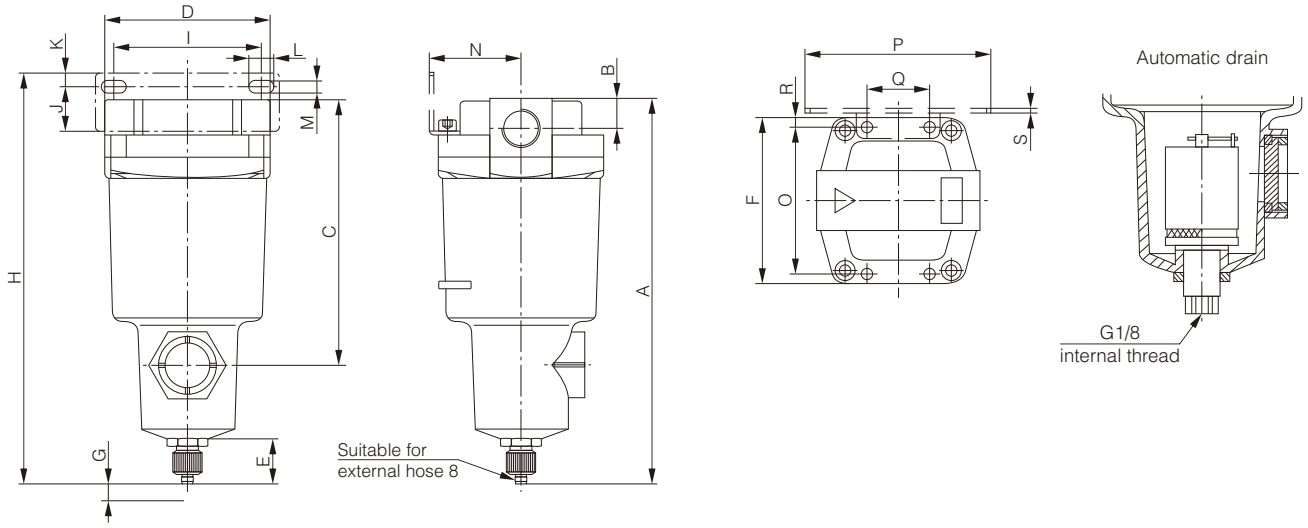

Model	Thread pipe	A	B	C	D	E	F	G	Installation size												
									H	I	J	K	L	M	N	O	P	Q	R	S	
AFF350	G1/2	209	16	145	90	24	90	10	224	80	23	8	14	7	50	80	97	34	5	2.3	
AFF550	G1	265	22	200	122	24	122	10	283	100	30	10	16	9	65	102	126	60	10	3.2	
AFF650	G1½	315	32	253	160	24	160	10	336	150	38	15	20	11	85	136	180	76	12	4.5	



Ordering code

A	F	9	00	20
Series	Function	Body size	Automatic drainer	Port size
	F Filter	8 G1½	00 No automatic drain	15 G1½
		9 G2	11 Automatic drain	20 G2

Specification

Model	AF800-15	AF900-20
Thread pipe	G1½	G2
Rating flow (L/min)	12000	20000
Max. working pressure	1.0MPa	
Operating temperature	-5~60℃(Not frozen)	
Filter precision	5μm 2~50μm	0.3μm(Removai 95%)
Protective cover	Yes	

Symbol

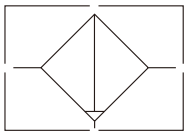

Dimensions

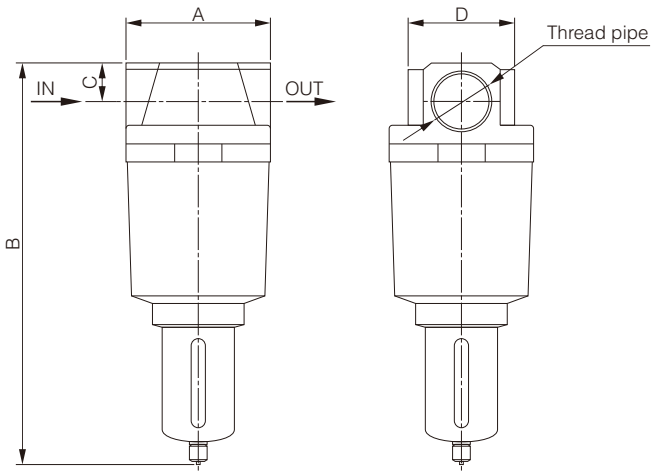

Model	Thread pipe	Standard Specification			
		A	B	C	D
AF800-15	G1½	120	331	31.5	88
AF900-20	G2	200.5	517.5	47	91

AL Series Big Flow Lubricator



Ordering code

A	L	900	20
Series	Function	Body size	Port size
	L Lubricator	800 G1½	15 G1½
		900 G2	20 G2

Specification

Model	AL800-15	AL900-20
Thread pipe	G1½	G2
Max. working pressure	1.0MPa	
Operating temperature	-5~60℃(Not frozen)	
Min. flow of oil drop (L/min)	650	1800
Recommended oil	Turbine NO.1 oil ISO VG32	
Protective cover	Yes	

Symbol

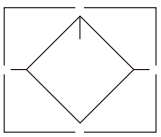

Dimensions

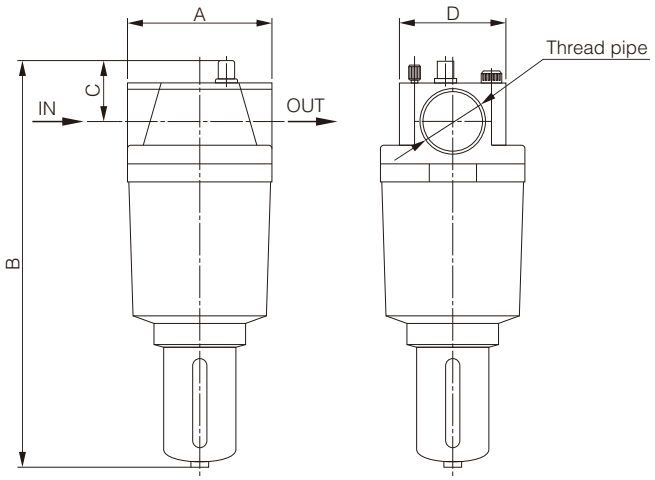

Model	Thread pipe	Standard Specification			
		A	B	C	D
AL800-15	G1½	120.5	318	47	91
AL900-20	G2	120.5	338	58	91



Symbol

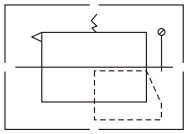

Ordering code

A	R	925	20
Series	Function	Body size	Port size
	R Regulator	825 G1½	15 G1½
		925 G2	20 G2

Specification

Model	AR825-15	AR925-20
Thread pipe	G1½	G2
Rating flow (L/min)	12000	20000
Max. working pressure	1.0MPa	
Ensured pressure resistance	1.5MPa	
Operating temperature	-5~60℃(Not frozen)	
Structure	Inter pilot and overflow venthole	
Adjustable pressure range	0.5~0.85MPa	
Gauge	G46-10-02	

Dimensions

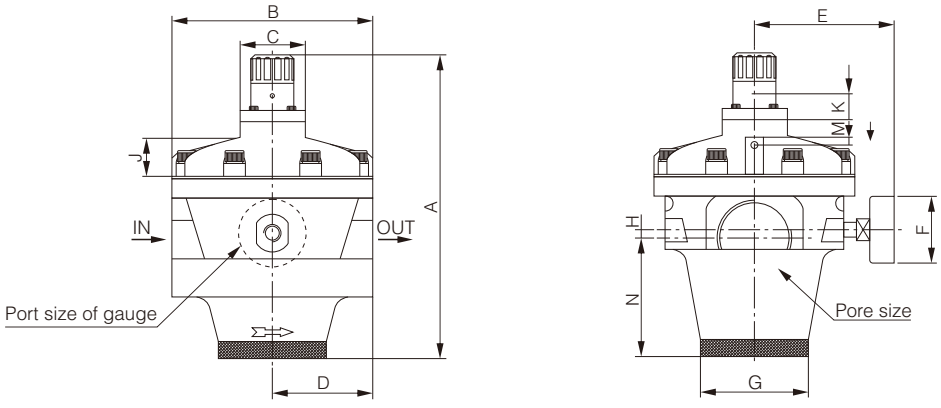

Model	Thread pipe	Thread pipe of gauge	Standard Specification											
			A	B	C	D	E	F	G	H	J	K	M	N
AR825-15	G2	G1/4	241	160	52	80	100	53	86	5.5	30	20	6.4	94.5
AR925-20	G1½	G1/4	210	126	52	83	95	53	70	6.5	30	20	6.4	60.5

ADV-AC Series
Automatic Drain Valve(AIRTAC Type)



ADV-AC-GW10



ADV-AC-GW10
(Include water cup)

Note: This machine is applicable for
Filter AIRTAC: AF2000.

Ordering code

ADV	AC	GW10
Model	Machine Type	Drain Principle

Model	
ADV	Automatic drain valve

Machine Type	
AC	AC Series

Drain Principle	
G	Lever type
W	Outer thread
10	The numbers means water drain outlet's diameter

Range of application

This product is installed at the bottom of water cups which are automatic drianers, air filters and air filter regulators and it can auto discharge the condense water gathered in the water cup.

Technical requirements

Working medium: Compressed air; Ambient and media temperature: 5-60℃;
Operating pressure: 0.2-0.8MPa.

Product feature

Automatic drain; Air shut off drain.

Points for attention

When using, the drainer should be installed vertically and the drain port facing down.

Dimensions

ADV-AC-GW10

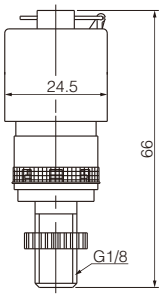

CO-AC-GW10(Include water cup)

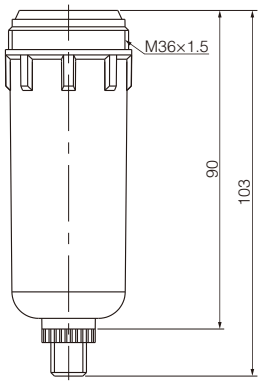

Dimensional drawing of water cup conneting part

ADV-AC-GW10

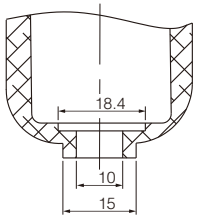

ADV-BC Series Automatic Drain Valve(AIRTAC Type)



ADV-BC-FK15.5

Note: This machine is applicable for Airtac Af4000,
and can be instead of AD400.

Ordering code

ADV	BC	FK15.5
Model	Machine Type	Drain Principle

Model	
ADV	Automatic drain valve

Machine Type	
BC	BC Series

Drain Principle	
F	Floating ball type
K	Quick connector
15.5	The numbers means water drain outlet's diameter

Range of application

This product is installed at the bottom of water cups which are automatic drianers, air filters and air filter regulators and it can automatic discharge the condense water gathered in the water cup.

Technical requirements

Working medium: Compressed air; Ambient and media temperature: 5-60℃;
Operating pressure: 0.2-0.8MPa.

Product feature

Manual drain; Automatic drain; Air shut off drain.

Points for attention

When using, the drainer should be installed vertically and the drain port facing down.

Dimensions

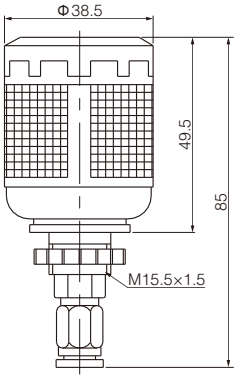

Dimensional drawing of water cup conneting part

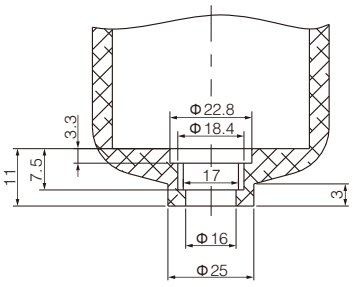



ADV-BC-FW16 ADV-BC-FN15.5

Note: This machine is applicable for Filter AIRTAC: AF4000.

Range of application

This product is installed at the bottom of water cups which are automatic drianers, air filters and air filter regulators and it can auto discharge the condense water gathered in the water cup.

Technical requirements

Working medium: Compressed air; Ambient and media temperature: 5-60℃;
Operating pressure: 0.2-0.8MPa.

Product feature

Automatic drain; Air Shut off Drain; Manual Drain.

Points for attention

When using, the drainer should be installed vertically and the drain port facing down.

Ordering code

ADV BC FW16\FN15.5

Model

ADV	Automatic drain valve

Machine Type

BC	BC Series

Drain Principle

F	Floating ball type
W	Outer thread
N	Inner thread
16\15.5	The numbers means water drain outlet's diameter

Dimensions

ADV-BC-FW16

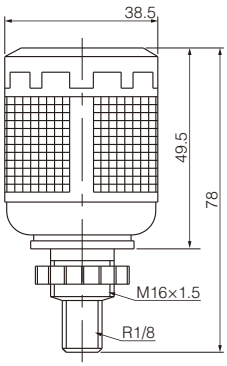

ADV-BC-FN15.5

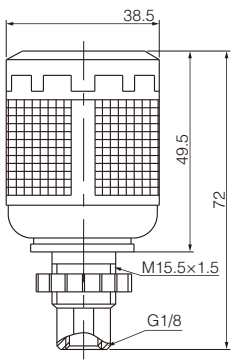

Dimensional drawing of water cup conneting part

ADV-BC-FW16\ADV-BC-FN15.5

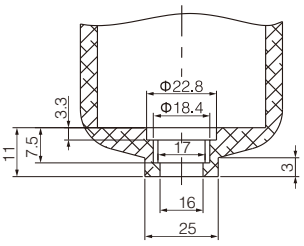

ADV-BC Series Automatic Drain Valve(AIRTAC Type)



ADV-BC-GW16 ADV-BC-GN15.5

Note: This machine is applicable for Filter AIRTAC: AF4000.

Range of application

This product is installed at the bottom of water cups which are automatic drianers, air filters and air filter regulators and it can auto discharge the condense water gathered in the water cup.

Technical requirements

Working medium: Compressed air; Ambient and media temperature: 5-60℃;
Operating pressure: 0.2-0.8MPa.

Product feature

Automatic drain; Air shut off drain.

Points for attention

When using, the drainer should be installed vertically and the drain port facing down.

Ordering code

ADV BC GW16\GN15.5

Model

ADV	Automatic drain valve

Machine Type

BC	BC Series

Drain Principle

G	Lever type
W	Outer thread
N	Inner thread
16\15.5	The numbers means water drain outlet's diameter

Dimensions

ADV-BC-GW16

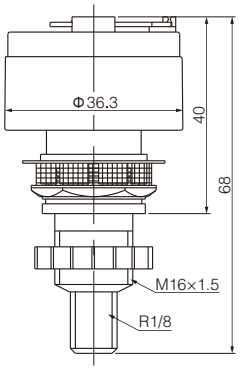

ADV-BC-GN15.5

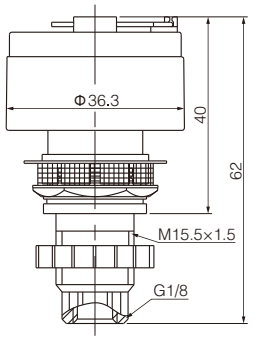

Dimensional drawing of water cup conneting part

ADV-BC-GW16\ADV-BC-GN15.5

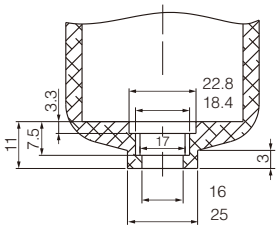

ADV-YDK Series
Automatic Drain Valve(AIRTAC Type)



ADV-YDK-GN12



ADV-YDK-GN16

Range of application

This product is installed at the bottom of water cups which are automatic drianers, air filters and air filter regulators and it can automatic discharge the condense water gathered in the water cup.

Technical requirements

Working medium: Compressed air; Ambient and media temperature: 5-60℃;
Operating pressure: 0.2-0.8MPa.

Product feature

Automatic drain; Air shut off drain.

Points for attention

When using, the drainer should be installed vertically and the drain port facing down.

Ordering code

ADV | YDK | GN12\16

Model

ADV	Automatic drain valve

Machine Type

YDK	YDK Series

Drain Principle

G	Lever type
N	Inner thread
12\16	The numbers means water drain outlet's diameter

Dimensions

ADV-YDK-GN12

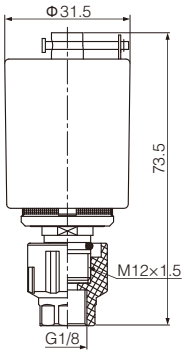

ADV-YDK-GN16

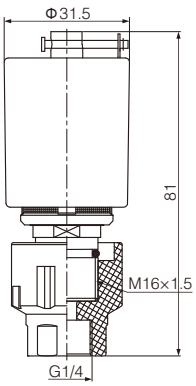

Dimensional drawing of water cup conneting part

ADV-YDK-GN12

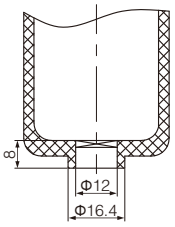

ADV-YDK-GN16

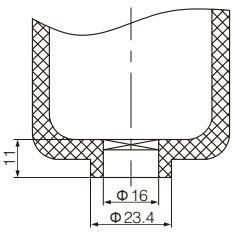

ADV-200 Series Automatic Drain Valve(SMC Type)



ADV-200-GW10



ADV-200-GW10
(Include water cup)

Range of application

This product is installed at the bottom of water cups which are automatic drianers, air filters and air filter regulators and it can auto discharge the condense water gathered in the water cup.

Technical requirements

Working medium: Compressed air; Ambient and media temperature: 5-60℃;
Operating pressure: 0.2-0.8MPa.

Product feature

Automatic drain; Air shut off drain.

Points for attention

When using, the drainer should be installed vertically and the drain port facing down.

Ordering code

ADV | 200 | GW10

Model

ADV	Automatic drain valve

Machine Type

200	200 Series

Drain Principle

G	Lever type
W	Outer thread
10	The numbers means water drain outlet's diameter

Dimensions

ADV-200-GW10

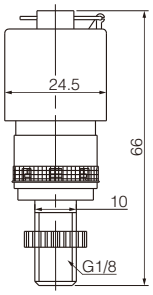

CO-200-GW10(Include water cup)

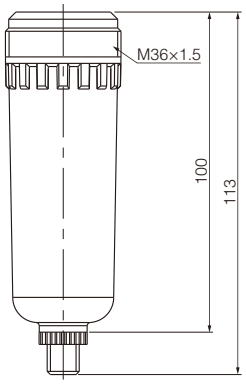

Dimensional drawing of water cup conneting part

ADV-AC-GW10

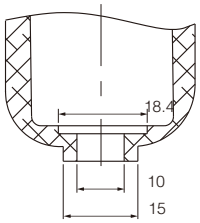

ADV-300 Series
Automatic Drain Valve(SMC Type)



ADV-300-GW12\14



ADV-300-GN12

Range of application

This product is installed at the bottom of water cups which are automatic drianers, air filters and air filter regulators and it can auto discharge the condense water gathered in the water cup.

Technical requirements

Working medium: Compressed air; Ambient and media temperature: 5-60℃;
Operating pressure: 0.2-0.8MPa.

Product feature

Automatic drain; Air Shut off Drain.

Points for attention

When using, the drainer should be installed vertically and the drain port facing down.

Ordering code

ADV — 300 — GW12\14;GN12

Model

ADV	Automatic drain valve

Machine Type

300	300 Series

Drain Principle

G	Lever type
W	Outer thread
N	Inner thread
12\14	The numbers means water drain outlet's diameter

Dimensions

ADV-300-GW12\14

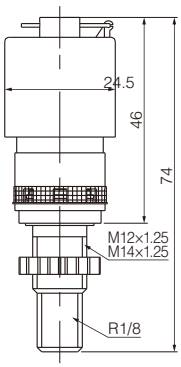

ADV-300-GN12

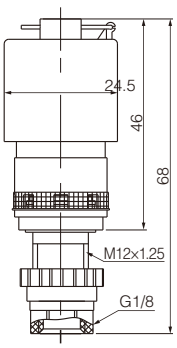

Dimensional drawing of water cup conneting part

ADV-300-GW12\14

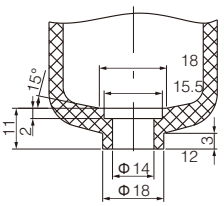

ADV-300-GN12

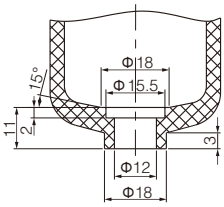

ADV-302 Series Automatic Drain Valve(SMC Type)



ADV-302-GK18



ADV-302-GN18

Range of application

This product is installed at the bottom of water cups which are automatic drianers, air filters and air filter regulators and it can auto discharge the condense water gathered in the water cup.

Technical requirements

Working medium: Compressed air; Ambient and media temperature: 5-60℃;
Operating pressure: 0.2-0.8MPa.

Product feature

Automatic drain; Air shut off drain.

Points for attention

When using, the drainer should be installed vertically and the drain port facing down.

Ordering code

ADV — 302 — GW12\14\15.5;GN12

Model

ADV	Automatic drain valve

Machine Type

302	302 Series

Drain Principle

G	Lever type
W	Outer thread
N	Inner thread
12\14\ 15.5	The numbers means water drain outlet's diameter

Dimensions

ADV-302-GW12

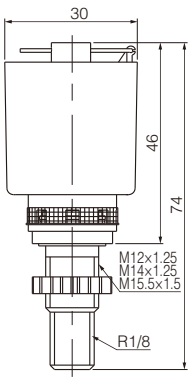

ADV-302-GN12\14

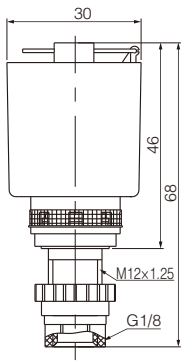

Dimensional drawing of water cup conneting part

ADV-302-GW12\14\15.5

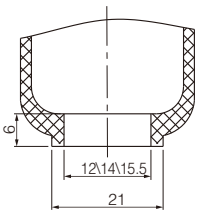

ADV-302-GN12\14

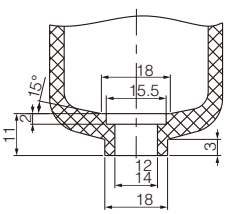

ADV-302 Series
Automatic Drain Valve(SMC Type)



ADV-302-GK18



ADV-302-GN18

Range of application

This product is installed at the bottom of water cups which are automatic drianers, air filters and air filter regulators and it can auto discharge the condense water gathered in the water cup.

Technical requirements

Working medium: Compressed air; Ambient and media temperature: 5-60℃;
Operating pressure: 0.2-0.8MPa.

Product feature

Automatic drain; Air shut off drain.

Points for attention

When using, the drainer should be installed vertically and the drain port facing down.

Ordering code

ADV | **302** | **GN18\GK18**

Model

ADV	Automatic drain valve

Machine Type

302	302 Series

Drain Principle

G	Lever type
N	Inner thread
K	Quick connector
12\14	The numbers means water drain outlet's diameter

Dimensions

ADV-302-GK18

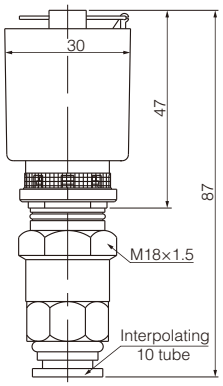

ADV-302-GN18

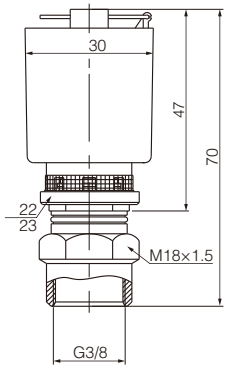

Dimensional drawing of water cup conneting part

ADV-302-GK18\ADV-302-GN18

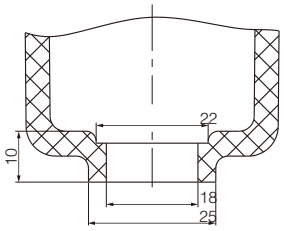

ADV-400 Series Automatic Drain Valve(SMC Type)



ADV-400-FW12\14



ADV-400-FN12

Note: This machine is applicable for Filter SMC: AF4000\ AF5000, SHAKO AF4000 and SHSNS AF4000.

Range of application

This product is installed at the bottom of water cups which are automatic drianers, air filters and air filter regulators and it can auto discharge the condense water gathered in the water cup.

Technical requirements

Working medium: Compressed air; Ambient and media temperature: 5-60℃;
Operating pressure: 0.2-0.8MPa.

Product feature

Automatic drain; Air Shut off Drain; Manual Drain.

Points for attention

When using, the drainer should be installed vertically and the drain port facing down.

Ordering code

ADV | **400** | **FW12/14;FN12**

Model

ADV	Automatic drain valve

Machine Type

400	400 Series

Drain Principle

F	Floating ball type
W	Outer thread
N	Inner thread
12\14	The numbers means water drain outlet's diameter

Dimensions

ADV-400-FW12\14

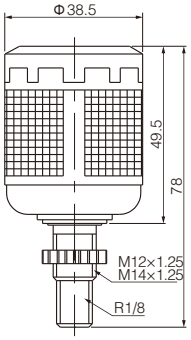

ADV-400-FN12

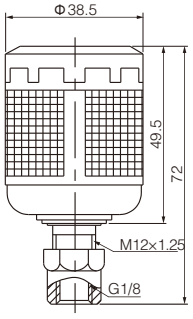

Dimensional drawing of water cup conneting part

ADV-400-FW12\14

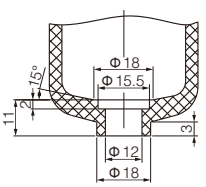

ADV-400-FN12

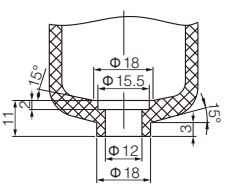

ADV-400 Series
Automatic Drain Valve(SMC Type)



ADV-400-GW12\14 ADV-400-GN12

Note: This machine is applicable for
Filter SMC: AF4000\AF5000.

Ordering code

ADV	400	GW12\14;GN12
Model	Machine Type	Drain Principle

Model	
ADV	Automatic drain valve

Machine Type	
400	400 Series

Drain Principle	
G	Lever type
W	Outer thread
N	Inner thread
12\14	The numbers means water drain outlet's diameter

Range of application

This product is installed at the bottom of water cups which are automatic drianers, air filters and air filter regulators and it can auto discharge the condense water gathered in the water cup.

Technical requirements

Working medium: Compressed air; Ambient and media temperature: 5-60℃;
Operating pressure: 0.2-0.8MPa.

Product feature

Automatic drain; Air Shut off Drain.

Points for attention

When using, the drainer should be installed vertically and the drain port facing down.

Dimensions

ADV-400-GW12\14 ADV-400-GN12

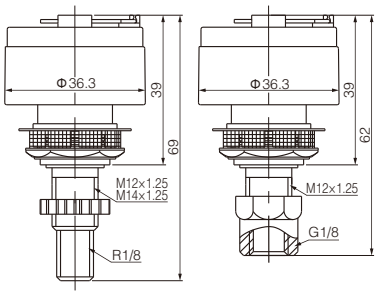

Dimensional drawing of water cup conneting part

ADV-400-GW12\14 ADV-400-GN12

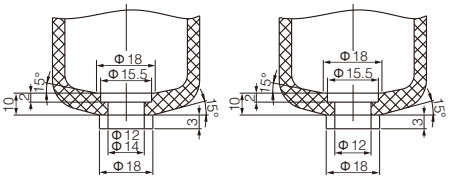

ADV-402 Series Automatic Drain Valve(SMC Type)



ADV-402-GK18 ADV-402-GN18

Note: This machine is applicable for
SMC: AD402 (End Automatic drain valve).

Ordering code

ADV	402	GN18\GK18
Model	Machine Type	Drain Principle

Model	
ADV	Automatic drain valve

Machine Type	
402	402 Series

Drain Principle	
G	Lever type
N	Inner thread
K	Quick connector
18	The numbers means water drain outlet's diameter

Range of application

This product is installed at the bottom of water cups which are automatic drianers, air filters and air filter regulators and it can auto discharge the condense water gathered in the water cup.

Technical requirements

Working medium: Compressed air; Ambient and media temperature: 5-60℃;
Operating pressure: 0.2-0.8MPa.

Product feature

Automatic drain; Air shut off drain.

Points for attention

When using, the drainer should be installed vertically and the drain port facing down.

Dimensions

ADV-402-GK18 ADV-402-GN18

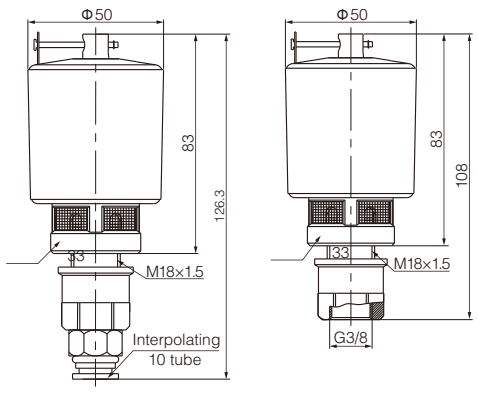

Dimensional drawing of water cup conneting part

ADV-402-GK18\ADV-402-GN18

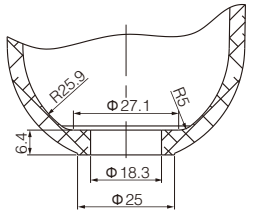



ADV-FST-GW12



ADV-FST-GW14

Note: This machine is applicable for Filter FESTO MINI Type.

Ordering code

ADV	FST	GW12\14
Model	Machine Type	Drain Principle

Model

ADV	Automatic drain valve

Machine Type

FST	FST Series

Drain Principle

G	Lever type
W	Outer thread
12\14	The numbers means water drain outlet's diameter

Range of application

This product is installed at the bottom of water cups which are automatic drianers, air filters and air filter regulators and it can auto discharge the condense water gathered in the water cup.

Technical requirements

Working medium: Compressed air; Ambient and media temperature: 5-60℃;
Operating pressure: 0.2-0.8MPa.

Product feature

Automatic drain; Air shut off drain.

Points for attention

When using, the drainer should be installed vertically and the drain port facing down.

Dimensions

ADV-FST-GW12

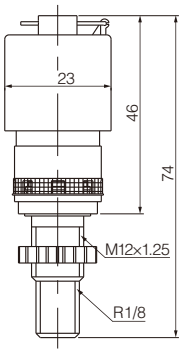

ADV-FST-GW14

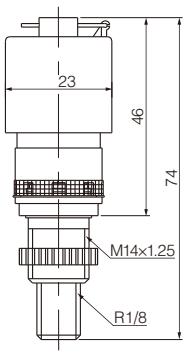

Dimensional drawing of water cup conneting part

ADV-FST-GW12

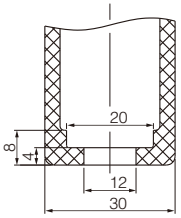

ADV-FST-GW14

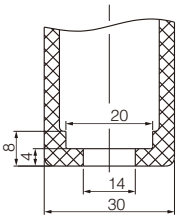

ADV-FST Series Automatic Drain Valve(FESTO Type)



ADV-FST-GW15.5



ADV-FST-GN15.5

Note: This machine is applicable for Filter FESTO MIDI MAXI Type.

Ordering code

ADV	FST	GW15.5\GN15.5
Model	Machine Type	Drain Principle

Model

ADV	Automatic drain valve

Machine Type

FST	FST Series

Drain Principle

G	Lever type
W	Outer thread
N	Inner thread
15.5	The numbers means water drain outlet's diameter

Range of application

This product is installed at the bottom of water cups which are automatic drianers, air filters and air filter regulators and it can auto discharge the condense water gathered in the water cup.

Technical requirements

Working medium: Compressed air; Ambient and media temperature: 5-60℃;
Operating pressure: 0.2-0.8MPa.

Product feature

Automatic drain; Air shut off drain.

Points for attention

When using, the drainer should be installed vertically and the drain port facing down.

Dimensions

ADV-FST-GW15.5

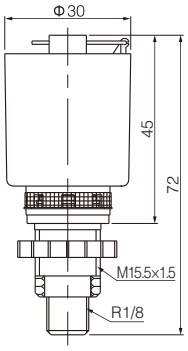

ADV-FST-GN15.5

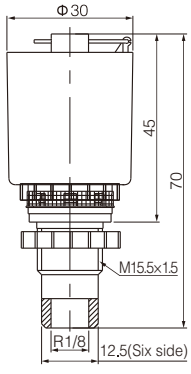

Dimensional drawing of water cup conneting part

ADV-FST-GW15.5

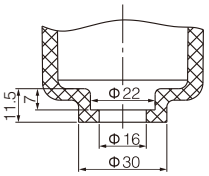

ADV-FST-GN15.5

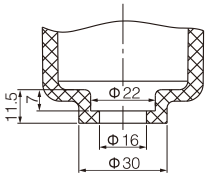

ADV-XG Series
Automatic Drain Valve(SHAKO Type)



ADV-XG-GW12\14

Note: This machine is applicable for Filter SHAKO, SHSNS AF4000.

Range of application

This product is installed at the bottom of water cups which are automatic drianers, air filters and air filter regulators and it can auto discharge the condense water gathered in the water cup.

Technical requirements

Working medium: Compressed air; Ambient and media temperature: 5-60℃;
Operating pressure: 0.2-0.8MPa.

Product feature

Automatic drain; Air shut off drain.

Points for attention

When using, the drainer should be installed vertically and the drain port facing down.

Dimensions

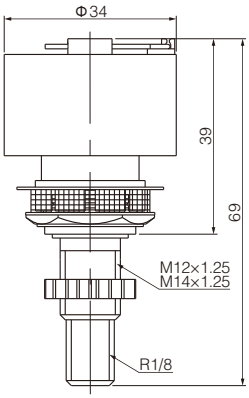

Dimensional drawing of water cup conneting part

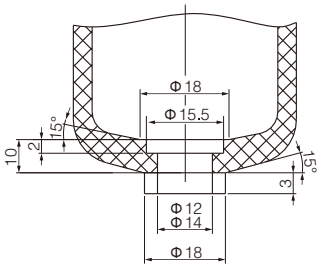

Ordering code

ADV	XG	GW12\14

Model

ADV	Automatic drain valve

Machine Type

XG	XG Series

Drain Principle

G	Lever type
W	Outer thread
12\14	The numbers means water drain outlet's diameter

ADV-NG Series Automatic Drain Valve(NORGREN Type)



ADV-NG-GW16

Note: This machine is applicable for Filter NORGREN AF2000.

Range of application

This product is installed at the bottom of water cups which are automatic drianers, air filters and air filter regulators and it can auto discharge the condense water gathered in the water cup.

Technical requirements

Working medium: Compressed air; Ambient and media temperature: 5-60℃;
Operating pressure: 0.2-0.8MPa.

Product feature

Automatic drain; Air shut off drain.

Points for attention

When using, the drainer should be installed vertically and the drain port facing down.

Dimensions

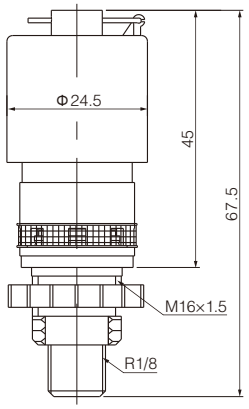

Dimensional drawing of water cup conneting part

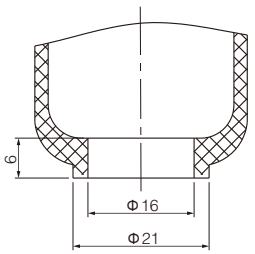

Ordering code

ADV	NG	GW16

Model

ADV	Automatic drain valve

Machine Type

NG	NG Series

Drain Principle

G	Lever type
W	Outer thread
16	The numbers means water drain outlet's diameter

NEU-MASTER®



ADV-ATLS-G17 ADV-ATLS-G20

Note: This machine is applicable for Filter ATLASCOPCO.



ADV-ATLS-G17 ADV

Range of app

This product i
air filter regulators

Technical req

Working medium:
Operating pressu

Product featu

Automatic drain; Air shut off drain.

Points for attention

When using, the drainer should be installed vertically and the drain port facing down.

Dimensions

ADV-ATLS-G17

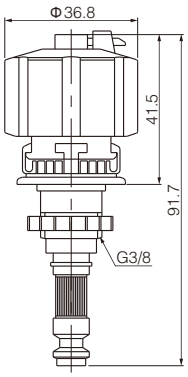

ADV-ATLS-G20

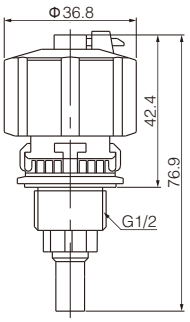

Dimensional drawing of water cup conneting part

ADV-ATLS-G17

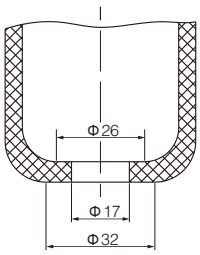

ADV-ATLS-G20

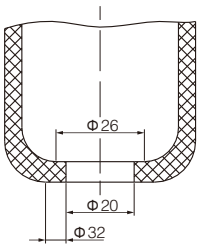

Ordering code

ADV	ATLS	GW12\14
Model	Machine Type	Drain Principle

Model

ADV	Automatic drain valve

Machine Type

ATLS	ATLS Series

Drain Principle

G	Lever type
W	Outer thread
12\14	The numbers means water drain outlet's diameter

ADV-ASCO\MA Series Automatic Drain Valve(ASCO\MINDMAN Type)



ADV-ASCO-GW10

Note: This machine is applicable for Filter ASCO.



ADV-MA-G14

Note: This machine is applicable for Filter MINDMAN.

Range of application

This product is installed at the bottom of water cups which are automatic drianers, air filters and air filter regulators and it can auto discharge the condense water gathered in the water cup.

Technical requirements

Working medium: Compressed air; Ambient and media temperature: 5-60℃;
Operating pressure: 0.2-0.8MPa.

Product feature

Automatic drain; Air Shut off Drain.

Points for attention

When using, the drainer should be installed vertically and the drain port facing down.

Dimensions

ADV-ASCO-GW10

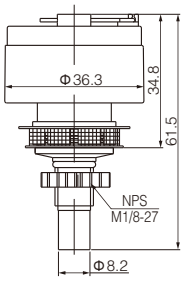

ADV-MA-G14

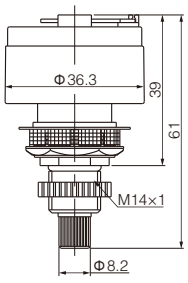

Dimensional drawing of water cup conneting part

ADV-ASCO-GW10

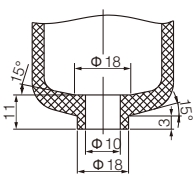

ADV-MA-G14

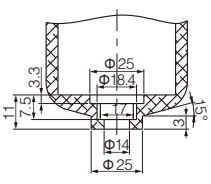

Ordering code

ADV	ASCO\MA	GW10\G14
Model	Machine Type	Drain Principle

Model

ADV	Automatic drain valve

Machine Type

ASCO	ASCO Series
MA	MA Series

Drain Principle

G	Lever type
W	Outer thread
10\14	The numbers means water drain outlet's diameter



AD402-S

Range of application

This product often applies to auto remove the seeoer at the lower pl-aces of piping, frozen type air drying machine, oil separator, air drying tanks and the bottom of various air filters. ttcan be installed in the pl-aces inconvenient for manual dis-charge of sevage. such as higher, lower and narrow places, especially there's large consumption of air of frequent water drains. It can prev-ent thecompressed air being re-polluted by condonse water resul-ting from neglect of manual drain.

Product feature

Automatic drain; Air shut off drain.

Points for attention

When using, the drainer should be installed vertically and the drain port facing down.

Dimensions

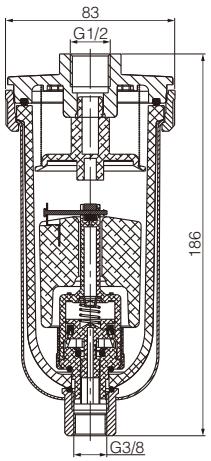

Specification

Model	AD402-S-02	AD402-S-03	AD402-S-04
Ensured pressure resistance	1.5MPa		
Operating pressure	0.3-0.8MPa		
Ambient and fluid temperature	5-60		
Port size	G1/4	G3/8	G1/2
Drain size	G3/8		
Drain status	Normal open type		
Woring medium	Compressed air		



AD402-X

Range of application

This product often applies to auto remove the seeoer at the lower pl-aces of piping, frozen type air drying machine, oil separator, air drying tanks and the bottom of various air filters. ttcan be installed in the pl-aces inconvenient for manual dis-charge of sevage. such as higher, lower and narrow places, especially there's large consumption of air of frequent water drains. It can prev-ent thecompressed air being re-polluted by condonse water resul-ting from neglect of manual drain.

Product feature

Automatic drain; Air shut off drain.

Points for attention

When using, the drainer should be installed vertically and the drain port facing down.

Dimensions

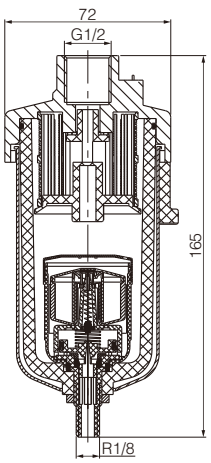

Specification

Model	AD402–X–02	AD402–X–03	AD402–X–04
Ensured pressure resistance	1.5MPa		
Operating pressure	0.2-0.8MPa		
Ambient and fluid temperature	5-60		
Port size	G1/4	G3/8	G1/2
Drain size	G3/8		
Drain status	Normal open type		
Woring medium	Compressed air		

AH402 Series
High Pressure End Automatic Drainer



Range of application

This product is a drainage device belongs to high voltage air system, water for the whole pipeline system, commonly used in the inconvenience of manual for water or drainage of high frequency equipment, such as the lower part of pipe, refrigerated air dryer, water tank and so on.

Product feature

Automatic drain;
metal cup is equipped with a visual window.

Points for attention

When using, the drainer should be installed vertically and the drain port facing down.

Dimensions

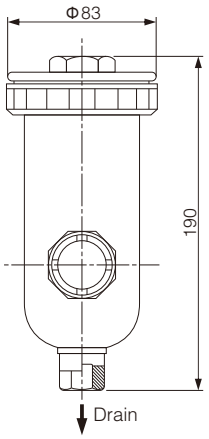

Specification

Model	AH402–02	AH402–03	AH402–04
Ensured pressure resistance	2.5MPa		
Operating pressure	0.15-2.0MPa		
Ambient and fluid temperature	5-60		
Port size	G1/4	G3/8	G1/2
Drain size	G1/8	G1/4	G3/8
Drain status	Normal open type		
Woring medium	Compressed air		

AD-5 Series End Automatic Drainer



Range of application

This product often applies to auto remove the seeoer at the lower pl-aces of piping, frozen type air drying machine, oil separator, air drying tanks and the bottom of various air filters. Itcan be installed in the pl-aces inconvent for manual dis-charge of sevage. Such as higher, lower and nrrow places, especially there's largeconsumption of air of frequent water drains. It can prev-ent thecompressed air being re-polluted by condonse water resul-ting from neglect of manual drain.

Product feature

High reliability forced drainage system; Automatic drain;
The water cup is provided with metal protective cover.

Points for attention

When using, the drainer should be installed vertically and the drain port facing down.

Dimensions

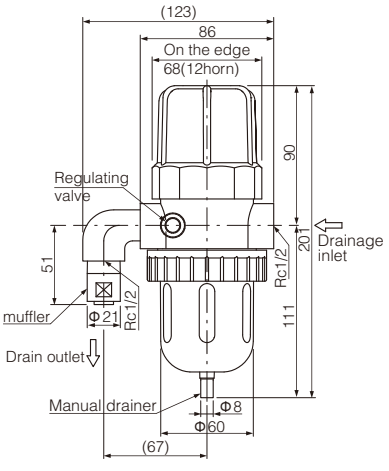

Specification

Model	AD-5
Ensured pressure resistance	1.5MPa
Operating pressure	0.29-0.98MPa
Ambient and fluid temperature	2-60
Port size	Rc1/2
Drain size	Rc1/2
Drain status	Normal open type
Woring medium	Compressed air



Symbol

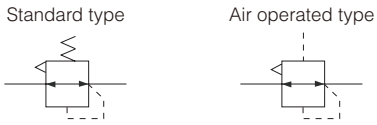

Product feature

1. small size, light weight.
2. compared to the traditional precision pressure reducing valve IR200 output flow.
3, compared to the traditional precision relief valve, IR200 overflow flow.
4. accurate pressure setting.
5. The pitch of the adjusting screw is changed from traditional 0.75mm to 0.5mm.
6. Easy to install. It can be installed independently by bracket or directly installed with the modular filter assembly AF and AFM.
7. standard type also has panel installation.
8. The pilot exhaust port is separated from the main exhaust port.
9. can be used in clean rooms (special injection products).

Ordering code

IR — **2** — **0** — **0** **0** — **02**

Model

IR	Precision regulator

Body size

1	IR1000 series
2	IR2000 series
3	IR3000 series

Type of setting

0	Basic type(Knob)
1	Air operated type (only IR$_3^2$000)

Set pressure range

IR1000\2000 series		IR3000 series	
0	0.05~0.2MPa	0	0.01~0.2MPa
1	0.01~0.4MPa	1	0.01~0.4MPa
2	0.01~0.8MPa	2	0.01~0.8MPa
Note: Air operated type only IR2120		Note: Air operated type only IR3120	

Port size

Symbol	Size	Application		
		IR1000	IR2000	IR3000
01	1/8	●		
02	1/4		●	●
03	3/8			●
04	1/2			●

Common specifications

sensitivity	Within 0.2% full degree	
Repeatability accuracy	Within ±0.5% full degree	
Gas consumption	IR10□0	Max.4.4ℓ/min(ANR)Under 1.0MPa pressure
	IR20□0	Max.4.4ℓ/min(ANR) Under 1.0MPa pressure
	IR2120	
	IR30□0	Max.11.5ℓ/min(ANR) Under 1.0MPa pressure
	IR3120	
Environment and fluid temperature	-5℃~60℃(Not frozen)	
Maximum operating pressure	1.0MPa	
Pressure gauge connecting caliber	Rc1/8	

Note: gas filter (AF) and oil mist separator (AM and AFM) shall be used in the supply side.

Application Example

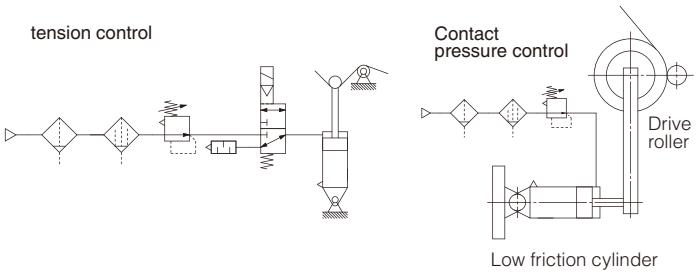

Model\Specifications

	Model Note)	Specifications			Accessories(optional)	
		Minimum use pressure (MPa)	Set the pressure range(MPa)	Pipe size	Pressure gauge type	Bracket type
Standard type	IR1000-01	Set pressure + 0.05	0.005~02	1/8	G33-2-01	P36201023
	IR1010-01		0.01~0.4		G33-4-01	
	IR1020-01		0.01~0.8		G33-10-01	
	IR2000-02		0.005~0.2	1/4	G43-2-01	P36202028
	IR2010-02		0.01~0.4		G43-4-01	
	IR2020-02		0.01~0.8		G43-10-01	
	IR3000-□	Set pressure + 0.1	0.01~0.2	1/4, 3/8, 1/2	G43-2-01	P362030-20
	IR3010-□		0.01~0.4		G43-4-01	
	IR3020-□		0.01~0.8		G43-10-01	
Air control type	IR2120-02	Set pressure + 0.05	0.01~0.8	1/4		P36202028
	IR3120-□	Set pressure + 0.1	0.01~0.8	1/4, 3/8, 1/2		P362030-20

Note: □-Representative pipe size
02=Rc1/4, 03=Rc3/8, 04=Rc1/2

Installed on modular filter assembly

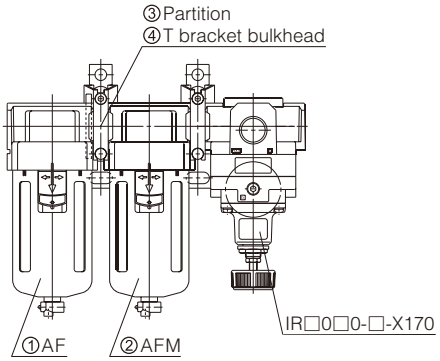

Suitable for accessory names	Suitable model		
	IR10□0-01-X170	IR20□0-02-X170	IR30□0-□□-X170
①Air filter	AF20-A	AF30-A	AF40-A
②Oil mist separator	AFM20-A	AFM30-A	AFM40-A
③bulkhead	Y200-A	Y300-A	Y400-A
④T bracket bulkhead	Y200T-A	Y300T-A	Y400T-A

Note) modular combination of filters with non-standard models(IR - -X170)

Dimensions

IR10□0-01

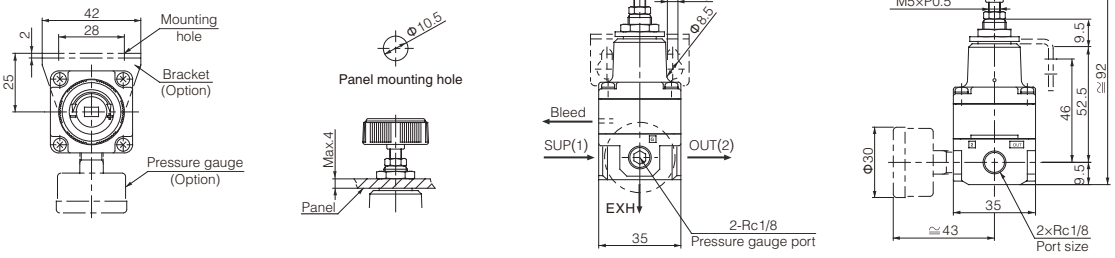

IR20□0-02

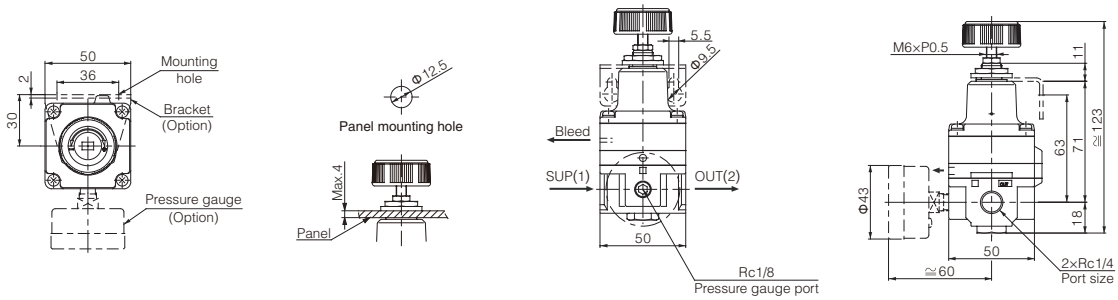

IR30□0-0□

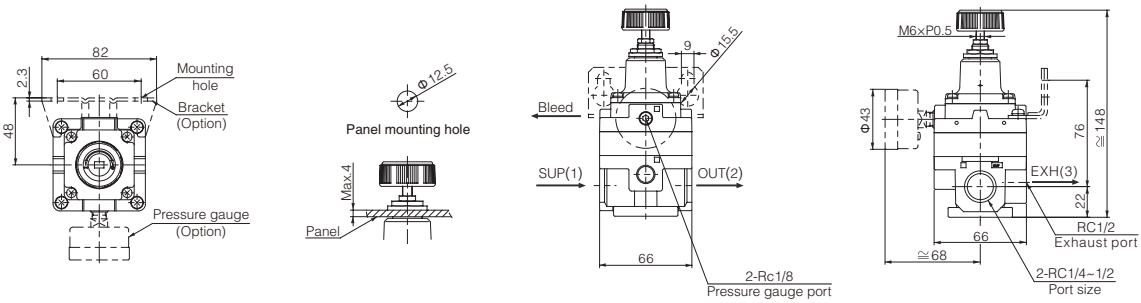

IR2120-02□ (Air control type)

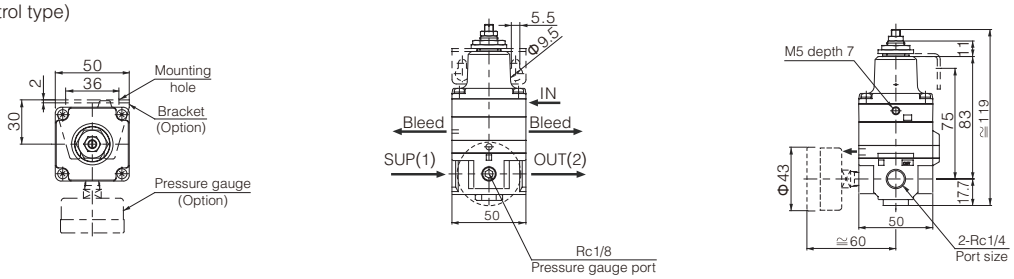

IR3120-0□□ (Air control type)

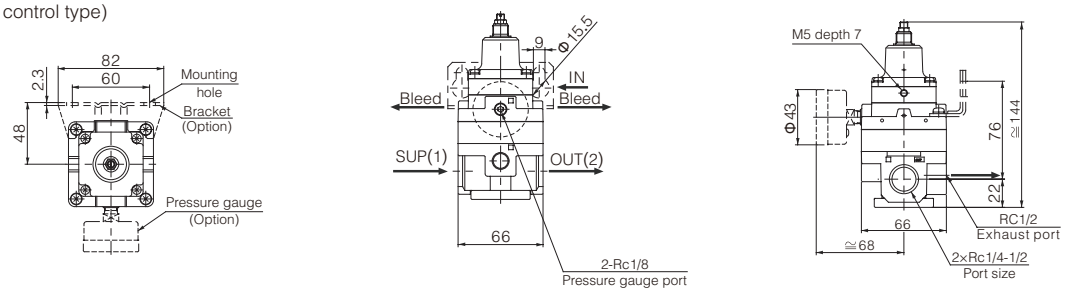



Symbol

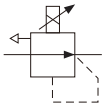

Product feature

1. Electrical proportional way to achieve stepless control of outlet pressure;
2. Compact and lightweight;
3. Low power consumption: less than 4W (communication form).

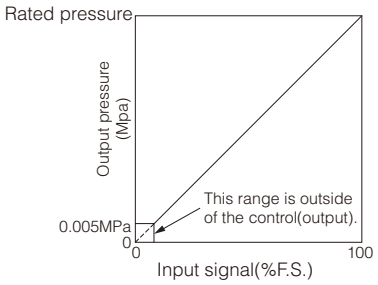

Input/output characteristics chart

Note: please don't install mist sprayer on the gas supply side

Specifications

Model		ITV101 / ITV201 / ITV301	ITV103 / ITV203 / ITV303	ITV105 / ITV205 / ITV305
Minimum supply pressure		Set pressure+0.1MPa		
Maximum supply pressure		0.2MPa	1.0MPa	
Set pressure range		0.005~0.1MPa	0.005~0.5MPa	0.005~0.9MPa
Power supply	Voltage	DC24V±10%, DC12~15V		
	Current consumption	Power supply voltage DC24V: 0.12A or less Power supply voltage DC12~15V: 0.18A or less		
Input signal	Current type Note 1)	4~20mA, 0~20mA		
	Voltage type	DC: 0~5V, DC: 0~10V		
	Preset input	16 points (No common polarity)		
Input impedance	Digital input	250 Ω or less		
	Current type	Approx. 6.5 kΩ		
	Voltage type	Approx 4.7kΩ(24VDC), Approx 2.0kΩ(12VDC)		
Output signal (monitor output) Note 2)	Analog output	DC1~5V(Load impedance: 1k Above) 4-20mADC(Exchange type)(Load impedance: 250 Following)		
	Switch output	NPN open collector output: Max. 30 V, 80 mA PNP open collector output: Max. 80 mA		
Linearity		± 1%F.S. or less		
Hysteresis		0.5%F.S. or less		
Repeatability		± 0.5%F.S. or less		
Sensitivity		0.2%F.S. or less		
Temperature characteristics		± 0.12%F.S./℃ or less		
Output pressure display Note 4)	Accuracy	± 2%F.S. ± 1 digit or less		
	Minimum unit	Mpa: 0.001, kgf/cm^2: 0.01, bar: 0.01, psi: 0.1 Note 3), kPa: 1		
Ambient and fluid temperature		0 to 50°C (No condensation)		
Protective structure		Quite IP65		
Weight	ITV10	250g		
	ITV20	350g		
	ITV30	645g		

Note 1) 2-wire type 4 to 20 mA DC is not available. Power supply voltage(24 VDC or 12 to 15 VDC)is required.
Note 2) the analog output and the switching output can be optionally one, the output of the switch, the NPN output and the PNP output, optionally one.
Note 3) The minimum unit for 0.9 MPa (130 psi) types is 1 psi.
Note 4) the recording characteristics are limited to static, and the pressure changes when the output side is consuming compressed air.
Note 5) CE authentication: suffix-Q, for example: ITV1010-012S-Q.

Ordering code

ITV 3 0 1 — 0 0 — 1 — 2 S

Model

1	1000 type
2	2000 type
3	3000 type

Pressure range

1	0.1MPa {1.0kgf/cm^2}
3	0.5MPa {5.1kgf/cm^2}
5	0.9MPa {9.2kgf/cm^2}

Power supply voltage

0	DC24V
1	DC12~15V

Input signal

0	Current type ~20mA
1	Current type ~20mA
2	Current type DC 0~5V
3	Current type DC 0~10V
*4	Preset input

* The standard type monitor output only corresponds to the "0" option.

Monitor output

*0	No (preset input)
1	Analog output DC 1~5V
*2	Switch output/NPN output
*3	Switch output/PNP output
*4	Analog output 4~20mA

*standard type

Port size

1	1/8 (1000 type)
2	1/4 (1000, 2000, 3000 type)
3	3/8 (2000, 3000 type)
4	1/2 (3000 type)

Cable connector type

S	Straight type 3m
*L	Right angle type 3m

*standard type

Accessories (optional) \ parts type

describe		Product type		
		ITV10	ITV20	ITV30
Plate type bracket assembly (with mounting screws)Type		KT-ITV-F1	KT–ITV–F2	
L bracket assembly (with mounting screws)		KT-ITV-L1	KT–ITV–L2	
Cable joint	Straight type 3m	P398020–500–3		
	Right angle type 3m	P398020–501–3		

Installed on modular filter assembly

ITV20

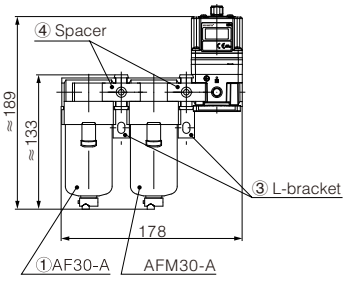

ITV30

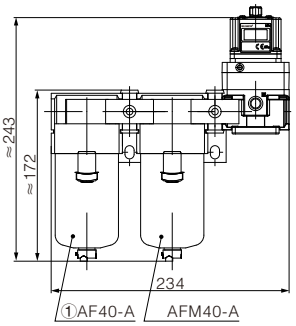

*ITV10 model is not suitable for the fortieth.

Applicable products and accessories	Applicable model	
	ITV20□□	ITV30□□
① Air filter	AF30-A	AF40-A
② Mist separator	AFM30-A	AFM40-A
③ L-bracket	B310L	B410L
④ Spacer	Y30	Y40
⑤ Spacer with L-bracket (③+④)	Y30L	Y40L
⑥ Spacer with T-bracket	-	Y40T

Dimensions

Flat bracket

ITV10

Note) Do not attempt to rotate, as the cable connector does not turn.

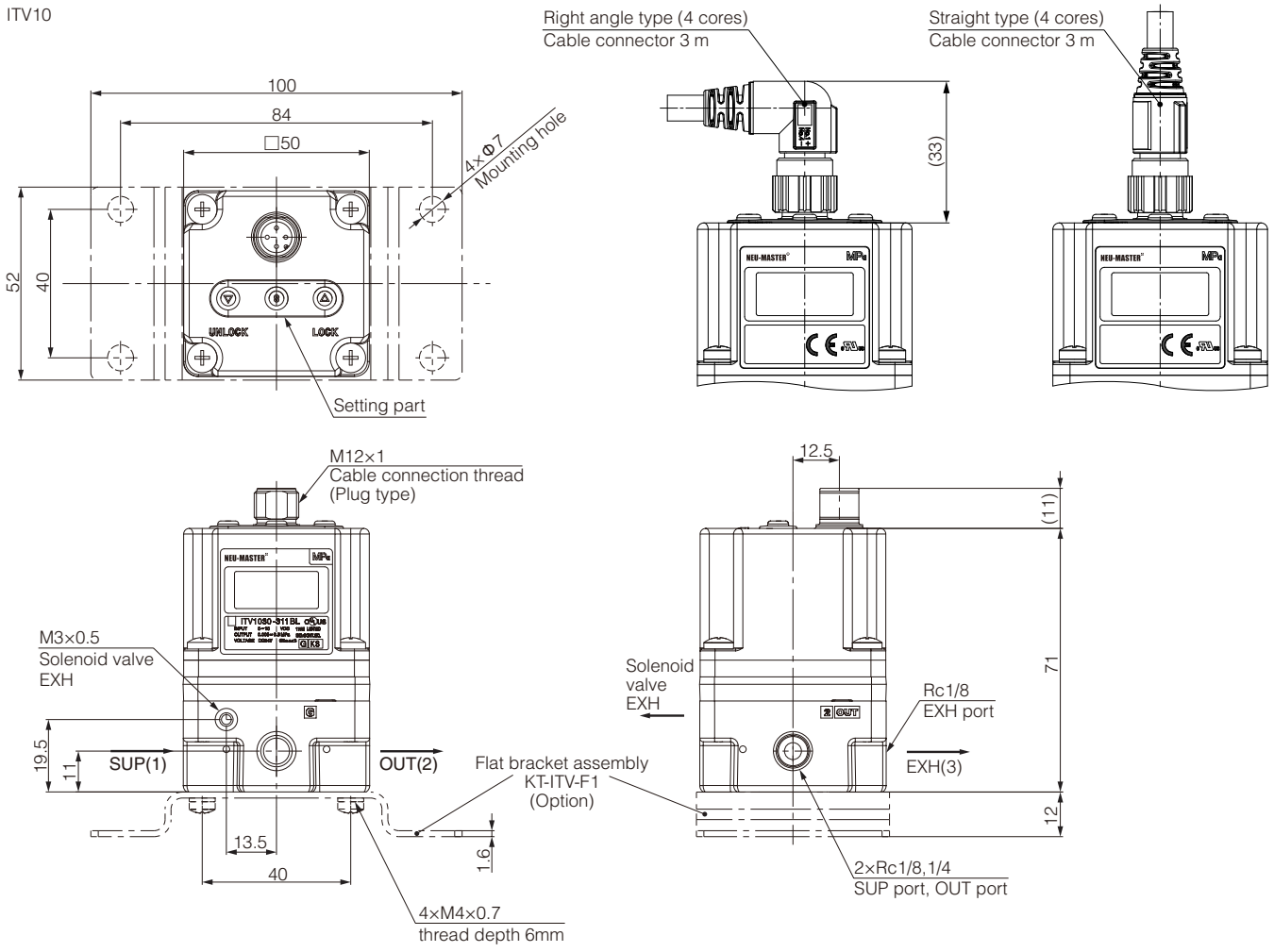

L-bracket

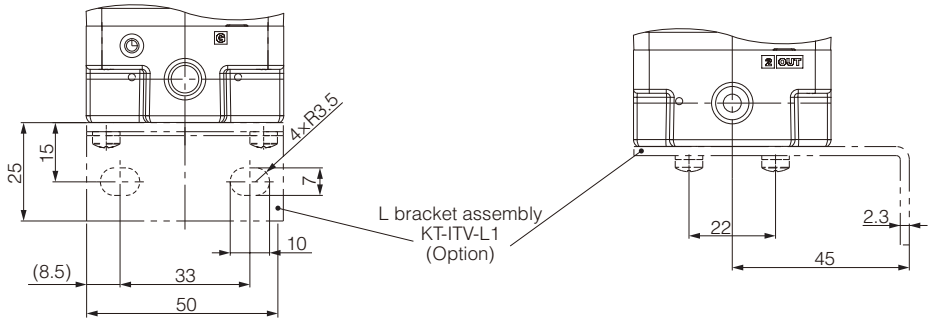

Flat bracket

ITV20

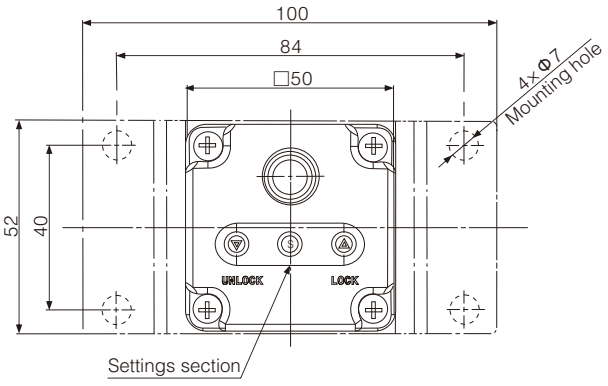

Note) Do not attempt to rotate, as the cable connector does not turn.

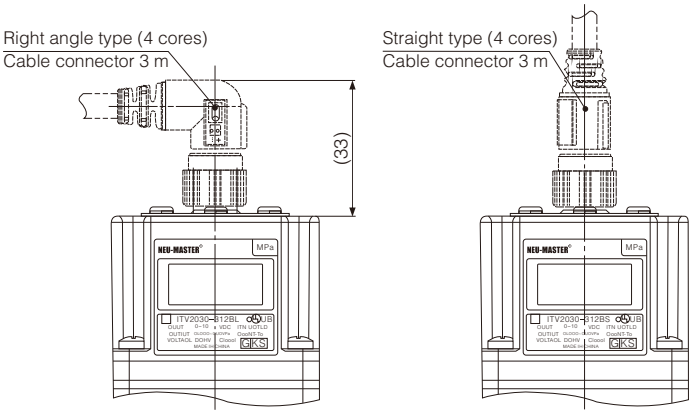

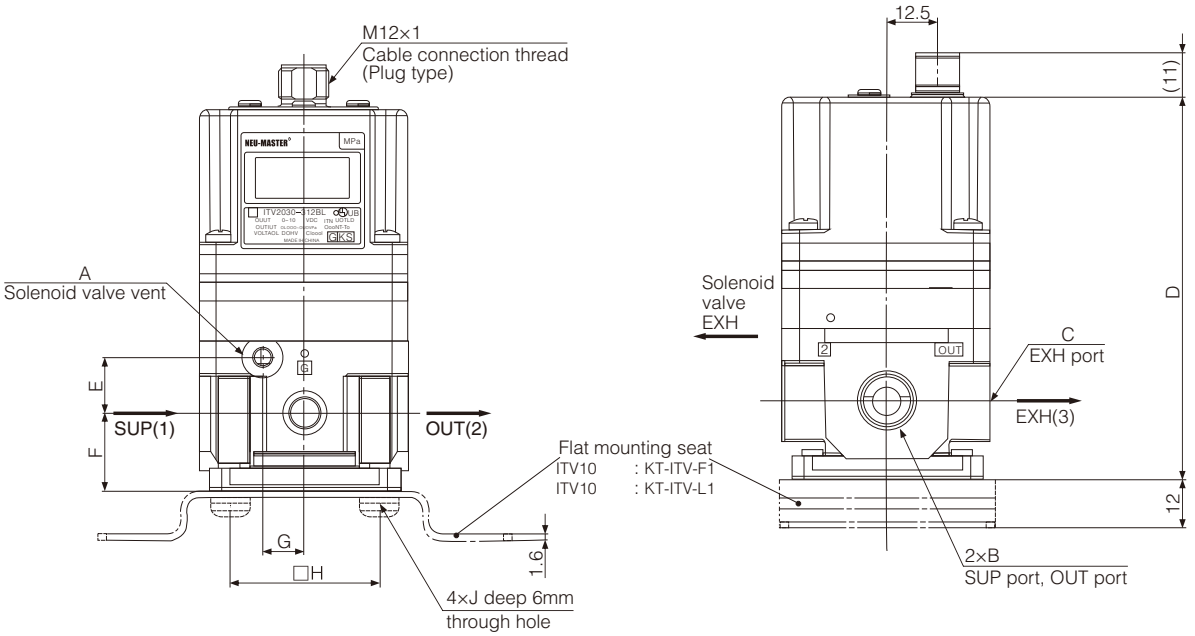

L bracket

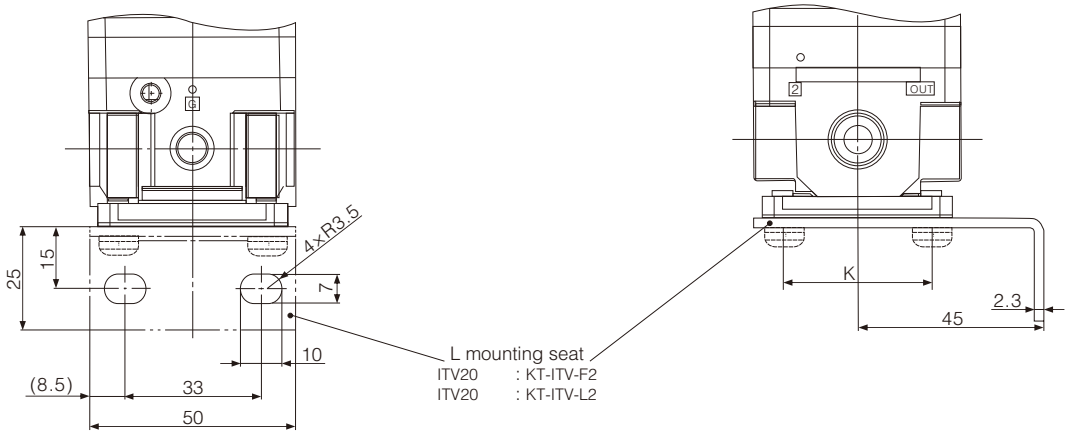

Model	A	B	C	D	E	F	G	H	J	K
ITV10□□-□□	M3×0.5	Rc1/8, 1/4	Rc1/8	71	8.5	11	13.5	40	M4×0.7	22
ITV20□□-□□	M5×0.8	Rc1/4, 3/8	Rc1/4	93	13.5	19	10	36	M5×0.8	36

Note: the outline of the ITV2000 series is shown. The appearance of the ITV1000 series is in kind.

Flat bracket

ITV30

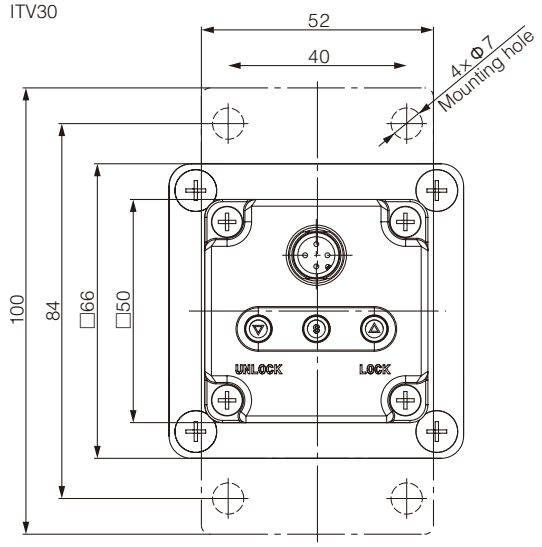

Note) Do not attempt to rotate, as the cable connector does not turn.

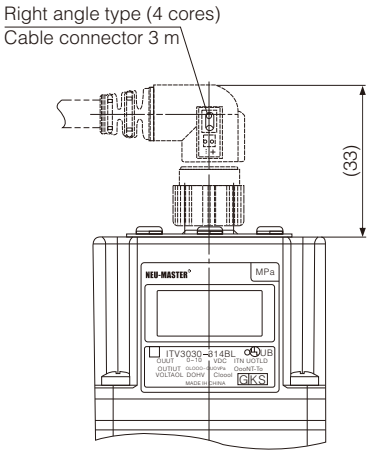

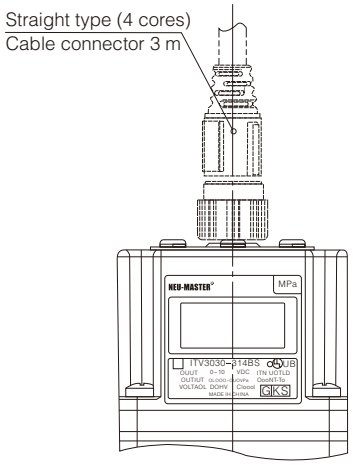

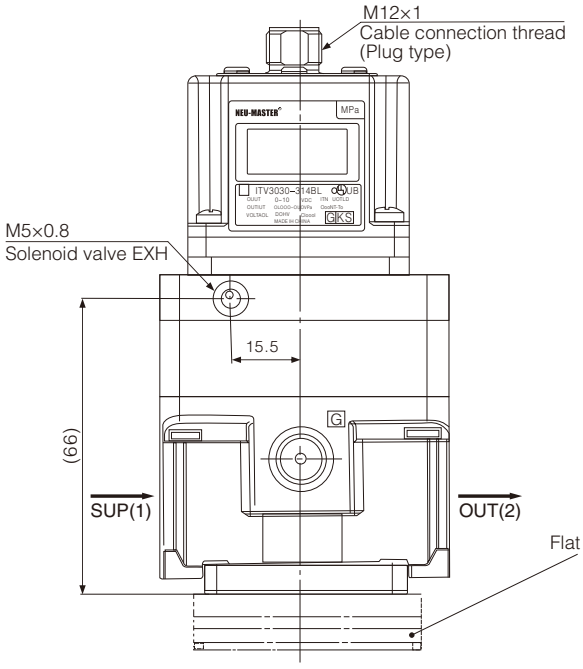

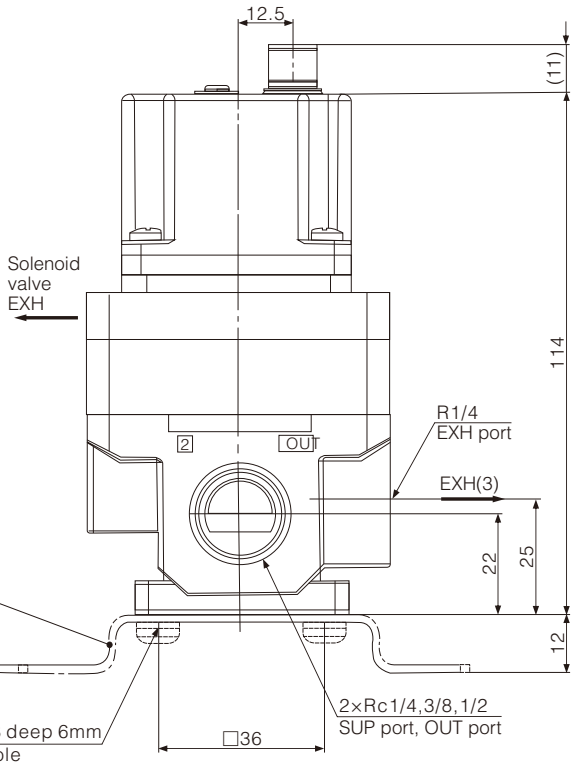

Flat mounting seat
KT-ITV-F2

L bracket

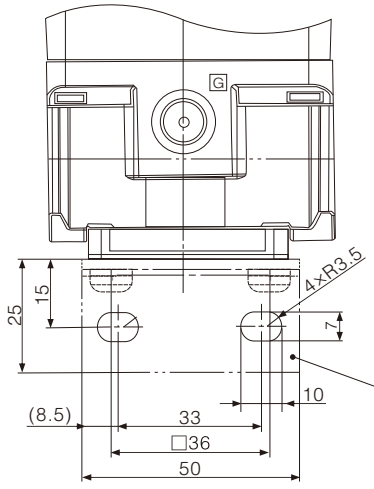

L mounting seat
KT-ITV-L2

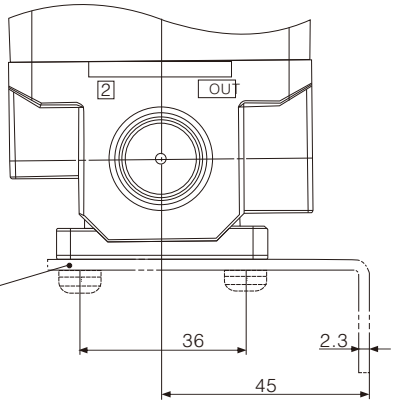



Product feature

1. A total of LED jump word display.
2. Selectable switch output or analog output two.
3. Connection mode can choose two types of vertical outlet or right angle outlet type.
4. The mounting dimensions are the same as those of the IT series.
5. Protection structure up to IP65.

Note: please do not add gas mist to the gas supply side.

Specifications

Model		ITV2090	ITV2091
Minimum supply vacuum pressure		Set pressure -13.3kPa	
Maximum supply vacuum pressure		-101kPa	
Set pressure range		-1.3~-80kPa	
Power supply	Voltage	DC24V×10%	DC12~15V
	Current consumption	Power supply voltage 24 VDC type: 0.12 A or less Power supply voltage 12~15 VDC type: 0.18 A or less	
Input signal	Current type Note 1)	4~20 mA DC, 0~20 mA DC (Sink type)	
	Voltage type	0~5 VDC, 0~10 VDC	
	Preset input	4 points (Negative common)	
Input impedance	Current type	250Ω or less	
	Voltage type	Approx. 6.5kΩ	
	Preset input	Power 24VDC is approx. 4.7kΩ; Power 12VDC is approx. 2kΩ	
Output signal (Monitor output) Note 2)	Analog output	VDC 1~5V (Output impedance: Approx. 1kΩ) 4~20mA (Sink type) (Output impedance: 250Ω or less) Output accuracy ±6% F.S. or less	
	Switch output	NPN open collector output: Max. 30V, 80mA PNP open collector output: Max. 80mA	
Linearity		±1% F.S. or less	
Hysteresis		0.5% F.S. or less	
Repeatability		±0.5% F.S. or less	
Sensitivity		0.2% F.S. or less	
Temperature characteristics		±0.12% F.S./°C or less	
Output pressure display	Accuracy	±2% F.S. ± 1 digit or less	
	Units	kPa: Minimum display 1	
Ambient and fluid temperature		0~50°C (No condensation)	
Enclosure		IP65	

Note 1) 2 wire 4~20mA is not available, the supply voltage is DC24V or DC12~15V.
Note 2) optional analog output or switch output. If select switch output, select NPN output or PNP output.

Ordering code

ITV 209 0 0 1 □ 2 □ S 5

Pressure range

9	-1.3~-80kPa

Power supply voltage

0	DC 24V
1	DC 12~15V

Input signal

0	DC 4~20mA (current type)
1	DC 0~20mA (current type)
2	DC 0~5V (voltage type)
3	DC 0~10V (voltage type)
*4	4 preset inputs

*standard type

Electric signal monitoring output

*0	No (preset only)
1	DC 1~5V analog output
*2	Switch output (NPN)
*3	Switch output (PNP)
*4	DC 4~20mA analog output

*standard type

Thread type

Blank	Rc
N	NPT
T	NPTF
F	G

Port size

2	1/4

Bracket *

Blank	Without bracket
B	Flat bracket
C	L-bracket

* Bracket is included.

Cable connector type

S	Straight type 3m
*L	Right angle type 3m

*standard type

Pressure display unit

4	kPa

Application examples

Multi-stage control to analog control

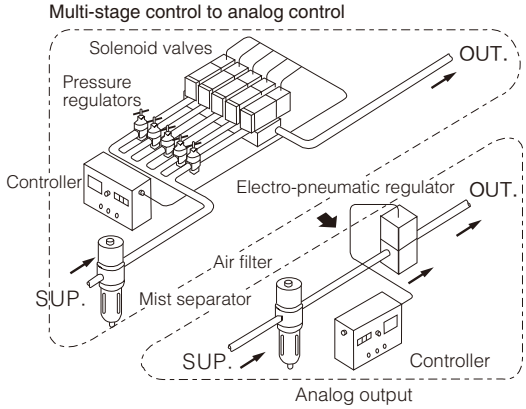

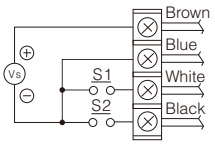

VS: Power Supply DC24V
DC12~15V

S1	Shut	Open	Shut	Open
S2	Shut	Shut	Open	Open
Preset pressure	P1	P2	P3	P4

Note: It is recommended that one of the preset pressures is set to 0 MPa and that the control will be safer.

Dimensions

Flat bracket

ITV209

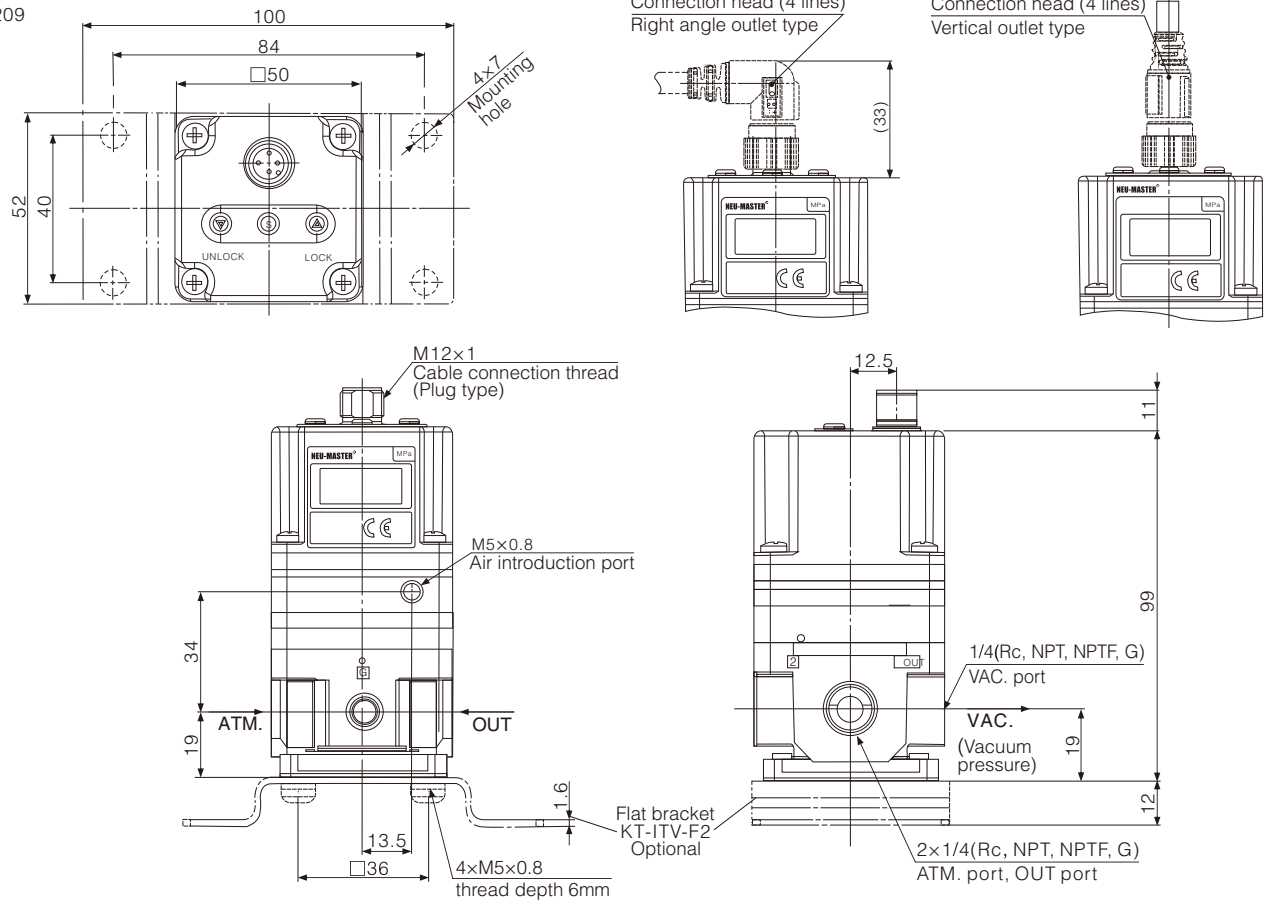

L-bracket

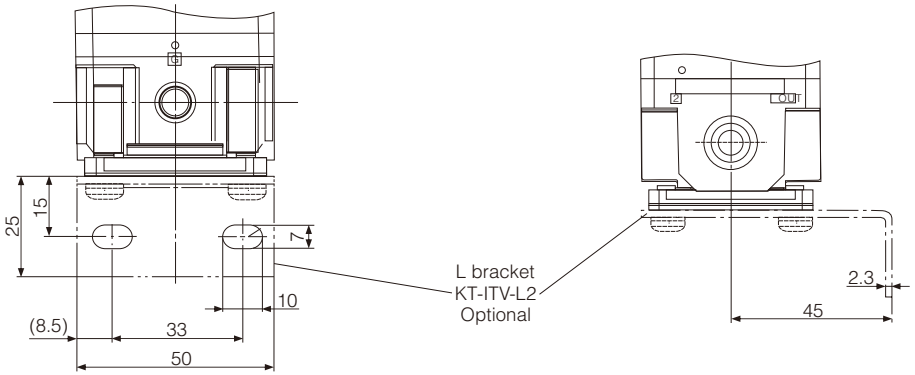

Accessories

Name	Model
Flat bracket	KT-ITV-F2
L bracket	KT-ITV-L2

Flat bracket

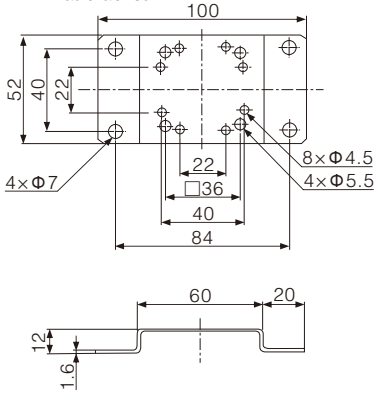

L-bracket

